US012766874B2

(12) **United States Patent**
Corey

(10) **Patent No.: US 12,766,874 B2**
(45) **Date of Patent: Oct. 20, 2026**

(54) **EXPANSION FILE FOLDER HAVING AT LEAST ONE OF A REMOVABLY SECURED COVER OR A REMOVABLY SECURED IDENTIFICATION INSERT**

(71) Applicant: **Thomas J. Corey**, Snyder, NY (US)

(72) Inventor: **Thomas J. Corey**, Snyder, NY (US)

(*) Notice: Subject to any disclaimer, the term of this patent is extended or adjusted under 35 U.S.C. 154(b) by 115 days.

(21) Appl. No.: **18/983,565**

(22) Filed: **Dec. 17, 2024**

(65) **Prior Publication Data**

US 2026/0166910 A1 Jun. 18, 2026

(51) **Int. Cl.**
B42F 13/02 (2006.01)
B42F 21/06 (2006.01)

(52) **U.S. Cl.**
CPC ***B42F 13/02*** (2013.01); ***B42F 21/06*** (2013.01)

(58) **Field of Classification Search**
CPC .. B42F 13/02; B42F 21/06; B42F 7/08; B42F 7/02; B42F 7/04; B65D 27/00; B65D 31/10; B65D 5/005
USPC 229/67.1, 67.3, 67.4, 72, 928, 929; 206/425, 818; 281/31, 35, 48; 402/70
See application file for complete search history.

(56) **References Cited**

U.S. PATENT DOCUMENTS

930,837	A	8/1909	Bushnell, Jr.	
1,455,419	A *	5/1923	Eugene	B65D 31/10 229/72
5,678,754	A	10/1997	Kranz	
7,147,142	B1 *	12/2006	Chang	A45C 13/1038 229/67.3
D554,704	S	11/2007	Krepak	
7,407,469	B2	8/2008	Lockhart	
7,900,814	B2 *	3/2011	McBride	B42F 7/02 229/72
7,909,234	B2	3/2011	Maistrellis	
8,118,165	B2	2/2012	Duvekot et al.	
D739,460	S	9/2015	Gilbertson et al.	
9,346,588	B2	5/2016	Gilbertson et al.	
9,902,189	B2	2/2018	Gilbertson et al.	
11,712,918	B2	8/2023	Corey	
2008/0078818	A1	4/2008	Botkin	
2009/0166400	A1	7/2009	Lee	
2012/0111930	A1 *	5/2012	Maistrellis	B42F 21/06 283/37
2022/0355611	A1	11/2022	Corey	

FOREIGN PATENT DOCUMENTS

DE	202010001605 U1	4/2010
FR	2329226	5/1977
JP	8032497	3/1997

* cited by examiner

Primary Examiner — Christopher R Demeree
(74) *Attorney, Agent, or Firm* — Simpson & Simpson, PLLC

(57) **ABSTRACT**

An expansion file folder, having a first wall and a second wall, each having four sides, the second wall having a pair of horizontal slots and a pair of vertical slots therein, a U-shaped pleated gusset, the gusset fixedly secured to three of the four sides of the first wall and fixedly secured to three of the four sides of the second wall, thereby forming an open pocket between the first and the second walls, the pocket having a pleated floor, and at least one of a cover having a pair of tabs extending therefrom, the pair of tabs of the cover arranged to removably engage the pair of horizontal slots, and an identification insert having a pair of tabs extending therefrom, the pair of tabs of the identification insert arranged to removably engage the pair of vertical slots.

11 Claims, 13 Drawing Sheets

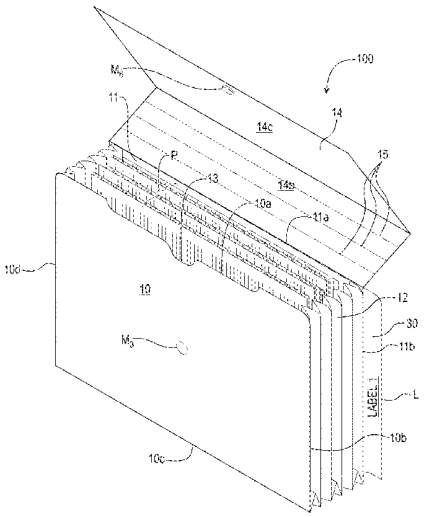

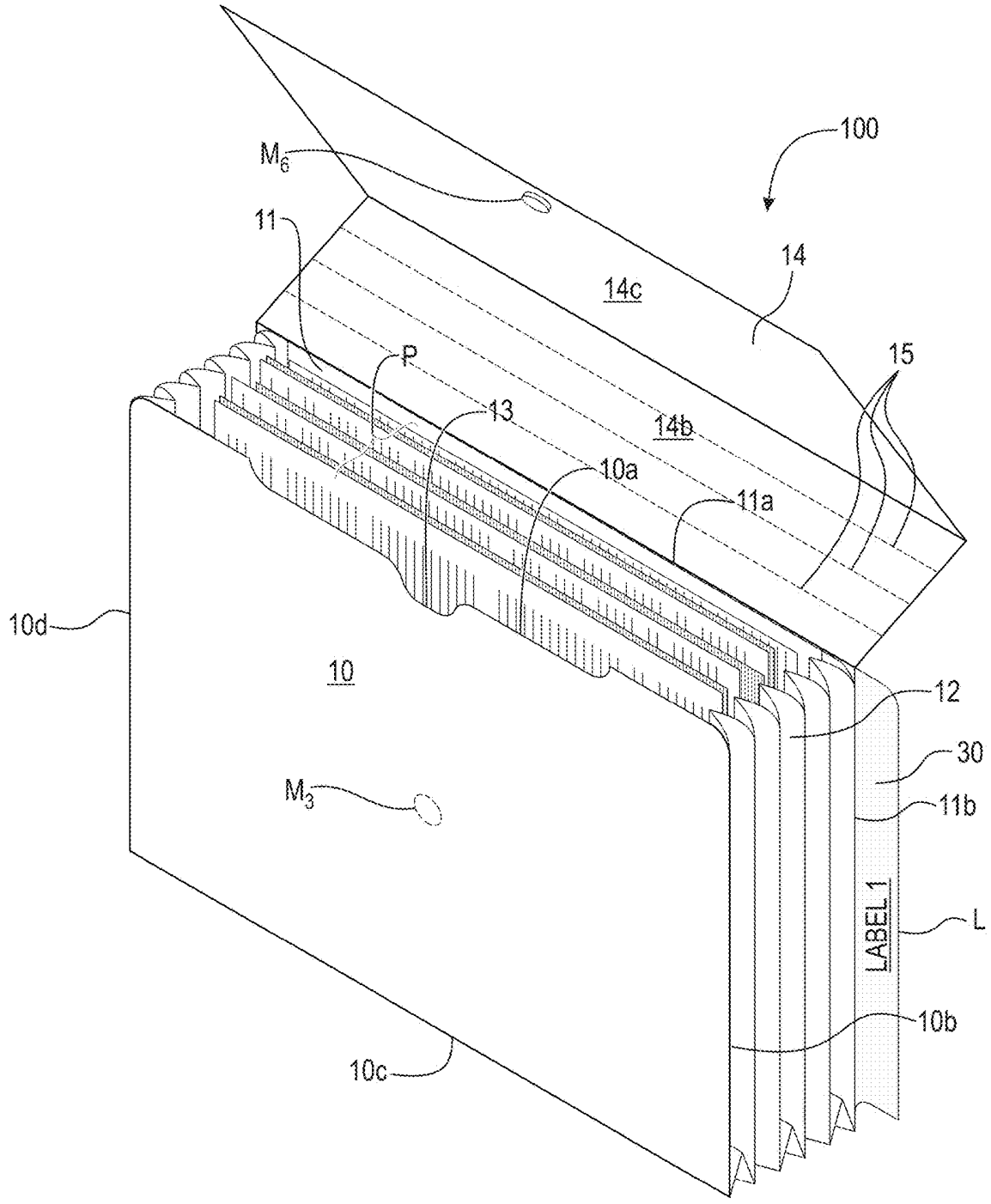
100
M6
11
14
14c
15
P
13
14b
10a
11a
10d
10
12
30
M3
11b
LABEL 1
L
10b
10c

Fig. 1

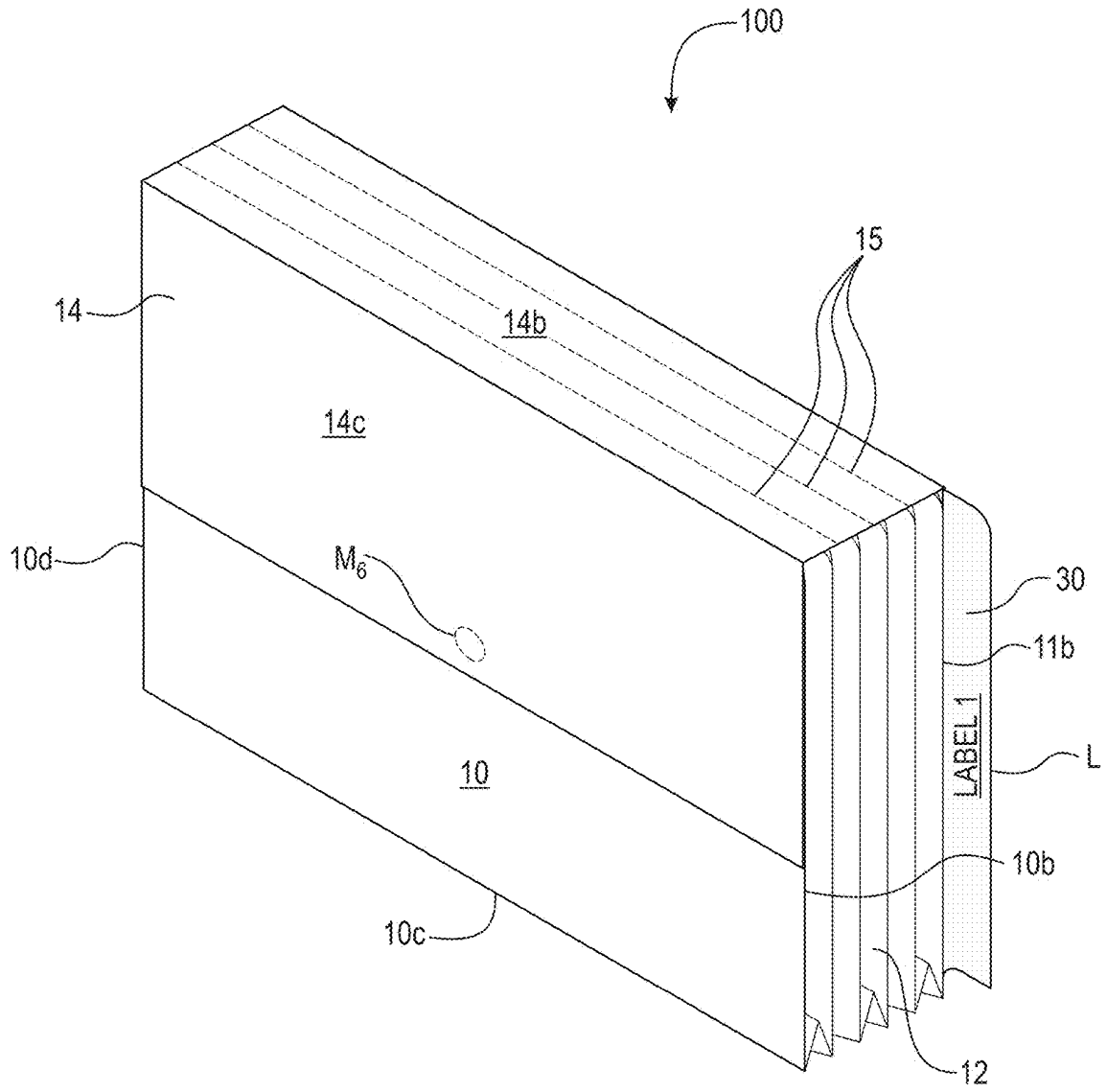

Fig. 2

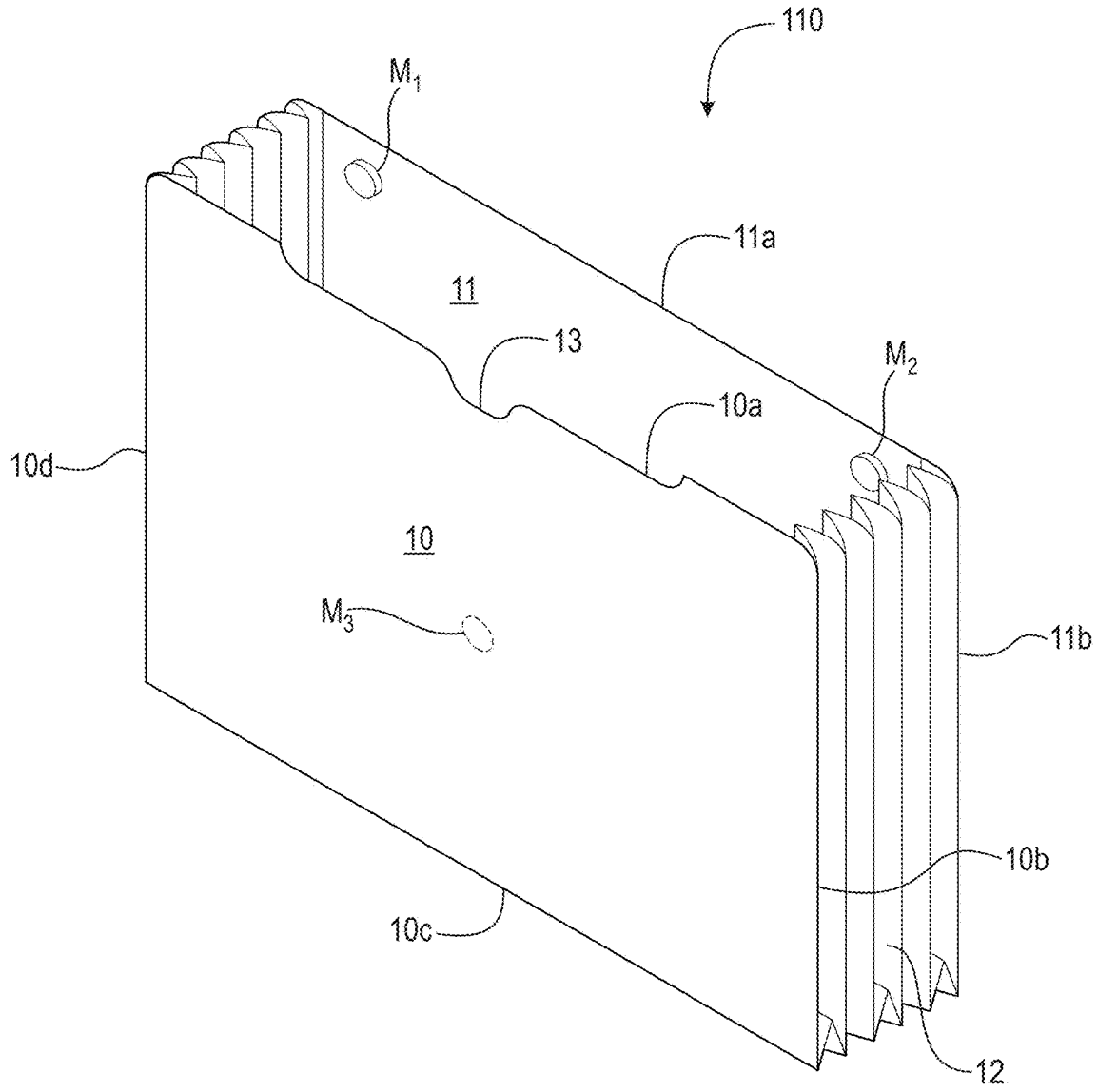

Fig. 3

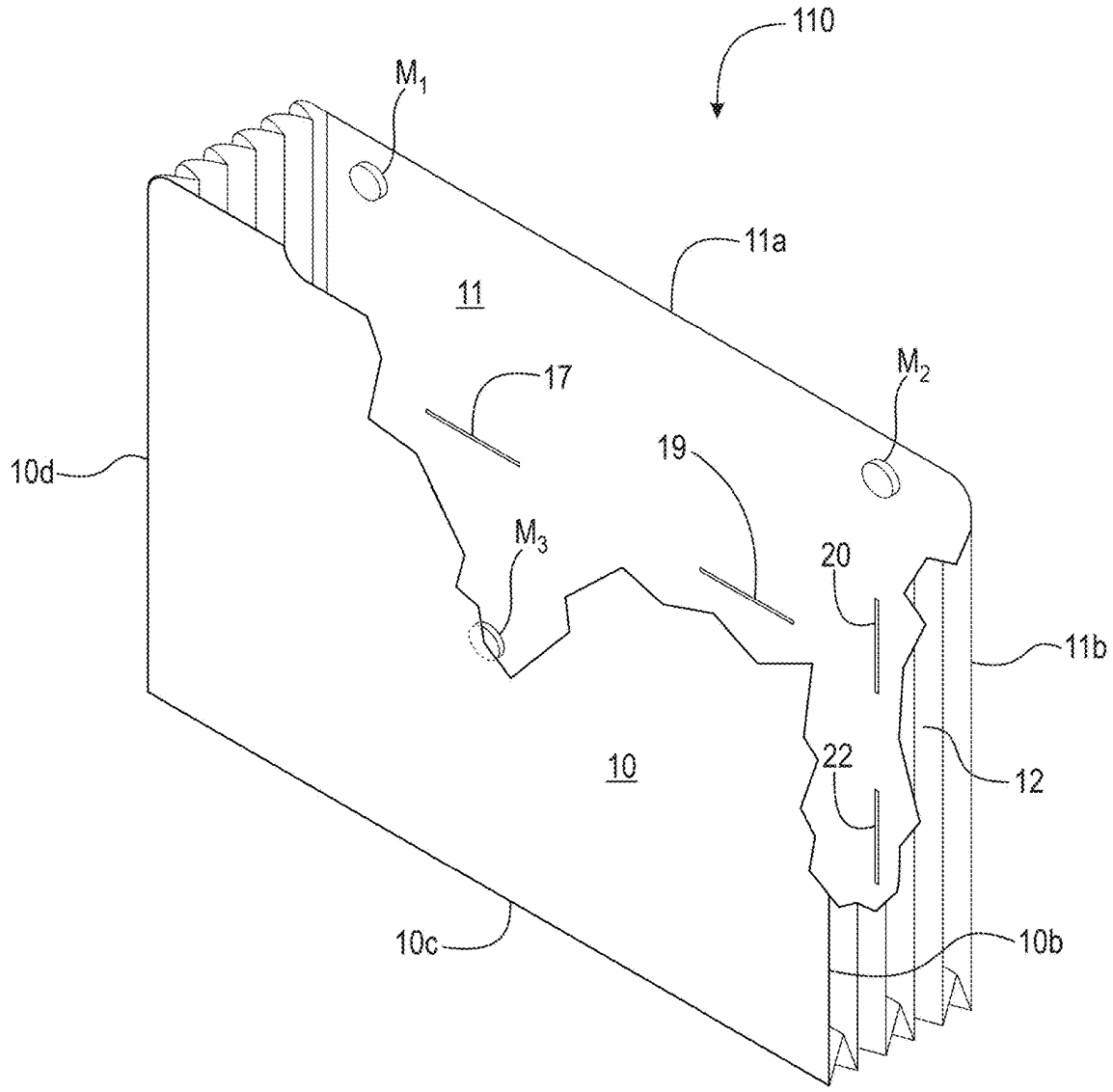

Fig. 4

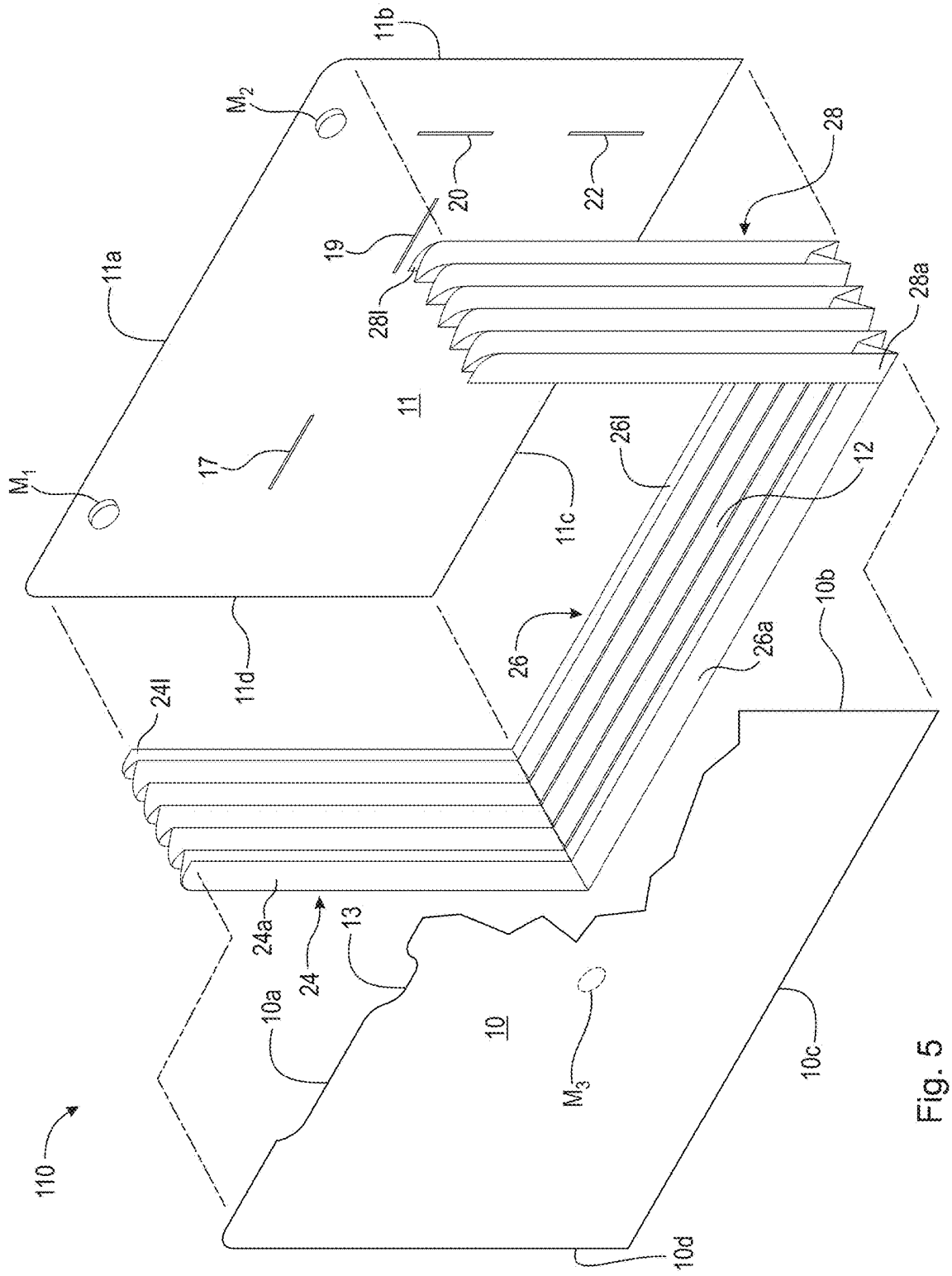
11b
M2
28
20
22
19
11a
28l
28a
11
17
M1
26l
12
11c
10b
26
26a
11d
24l
24a
24
13
10a
10
M3
10c
110
10d

Fig. 5

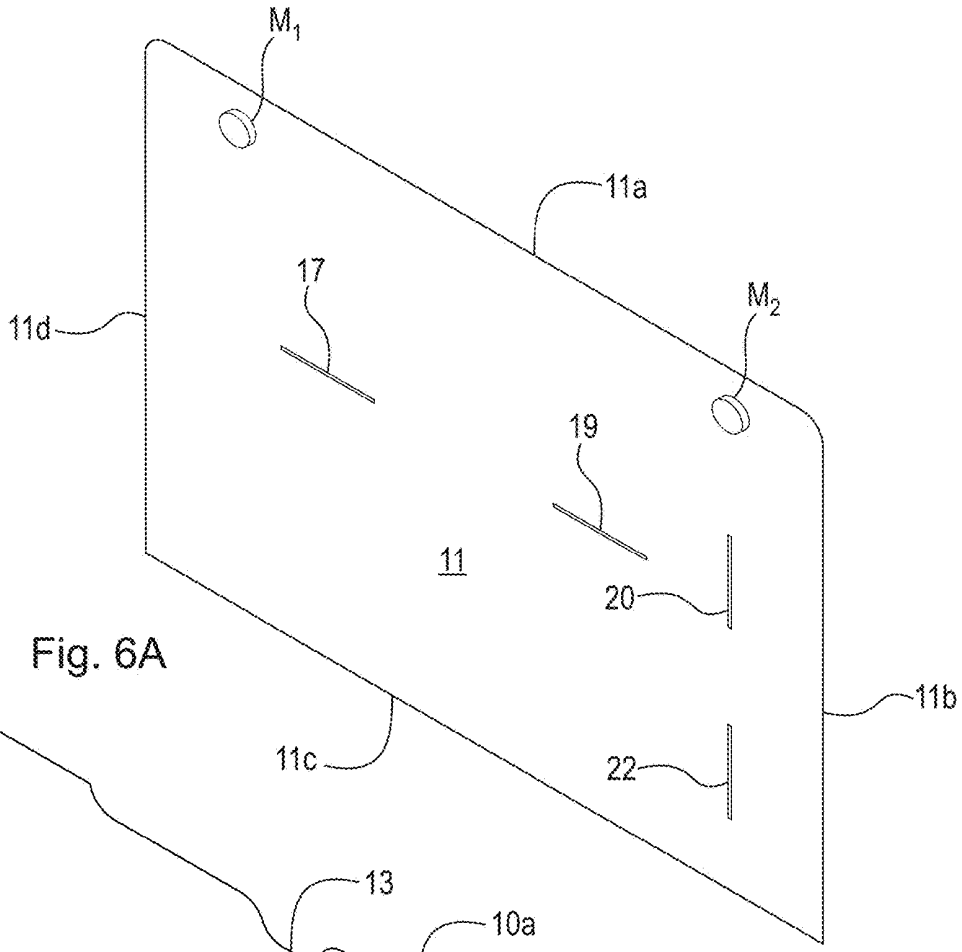

Fig. 6A

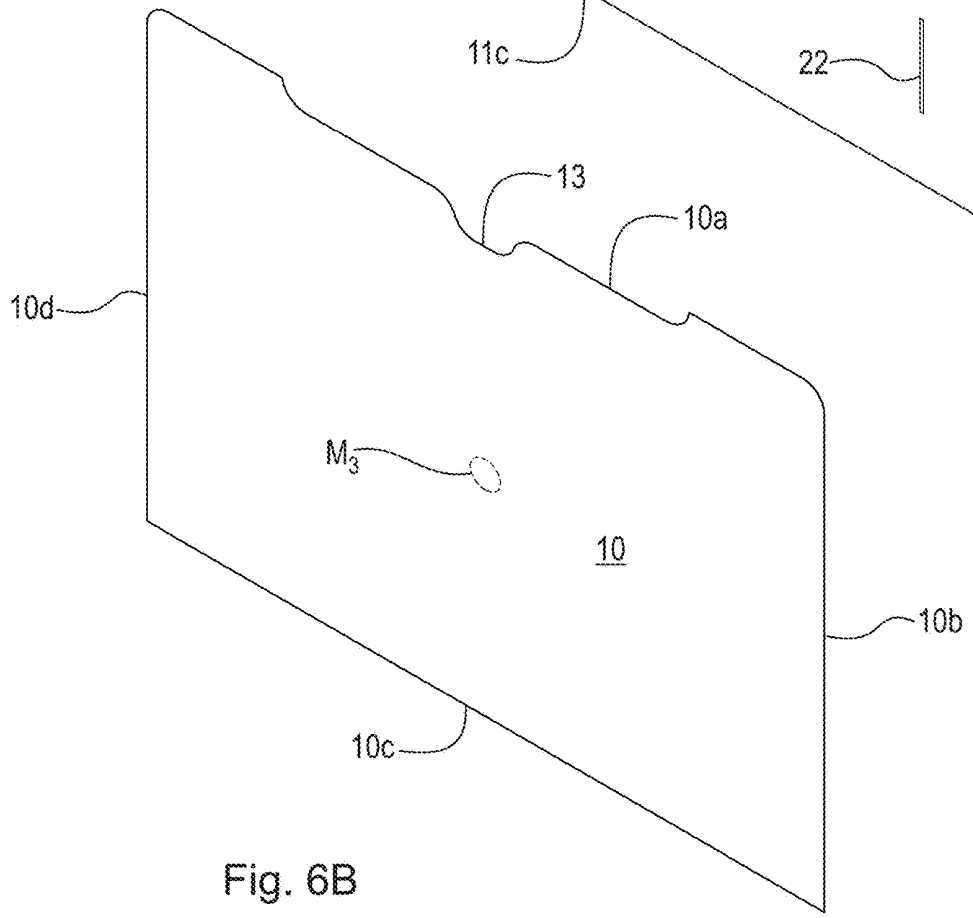

Fig. 6B

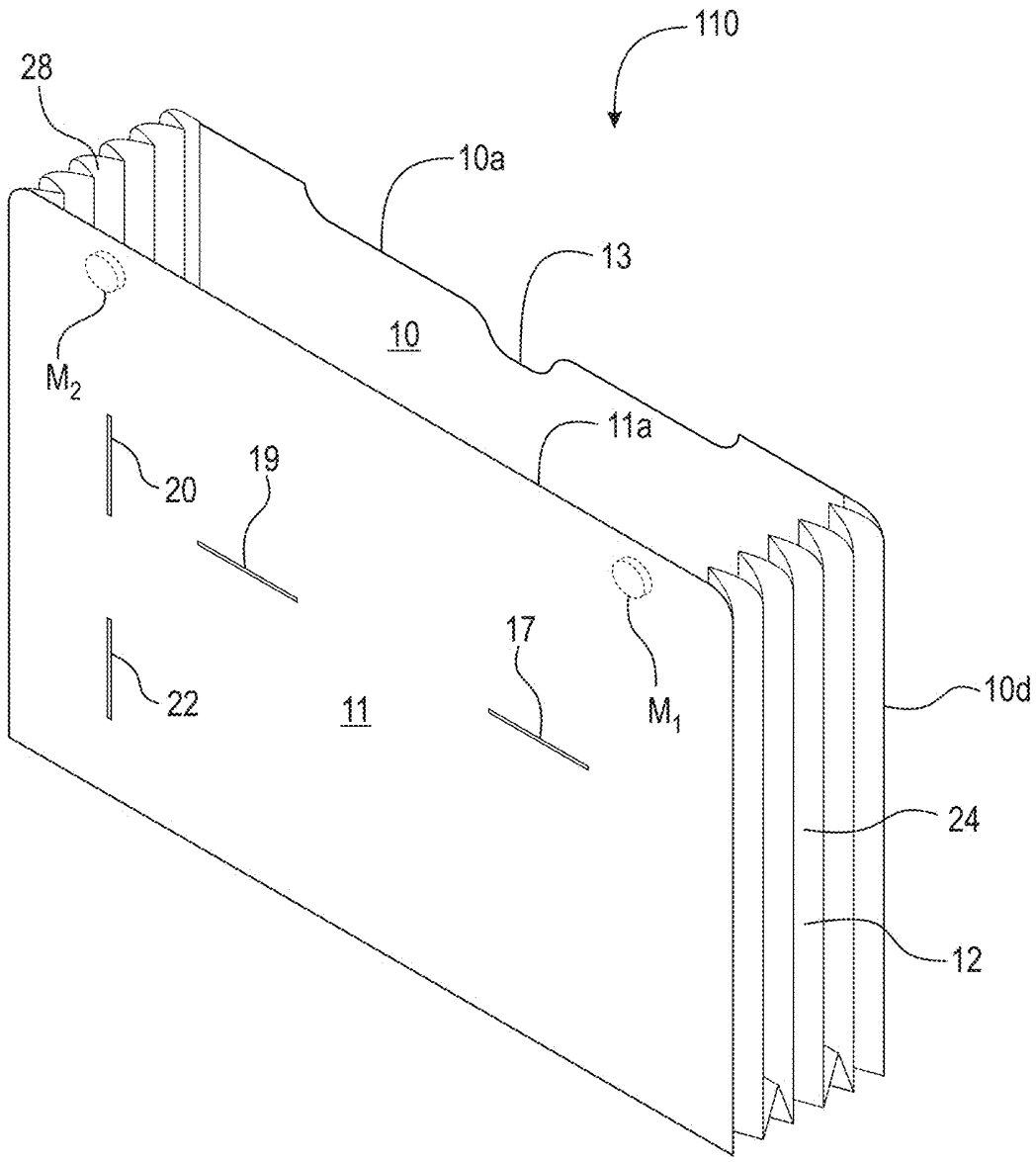

Fig. 7

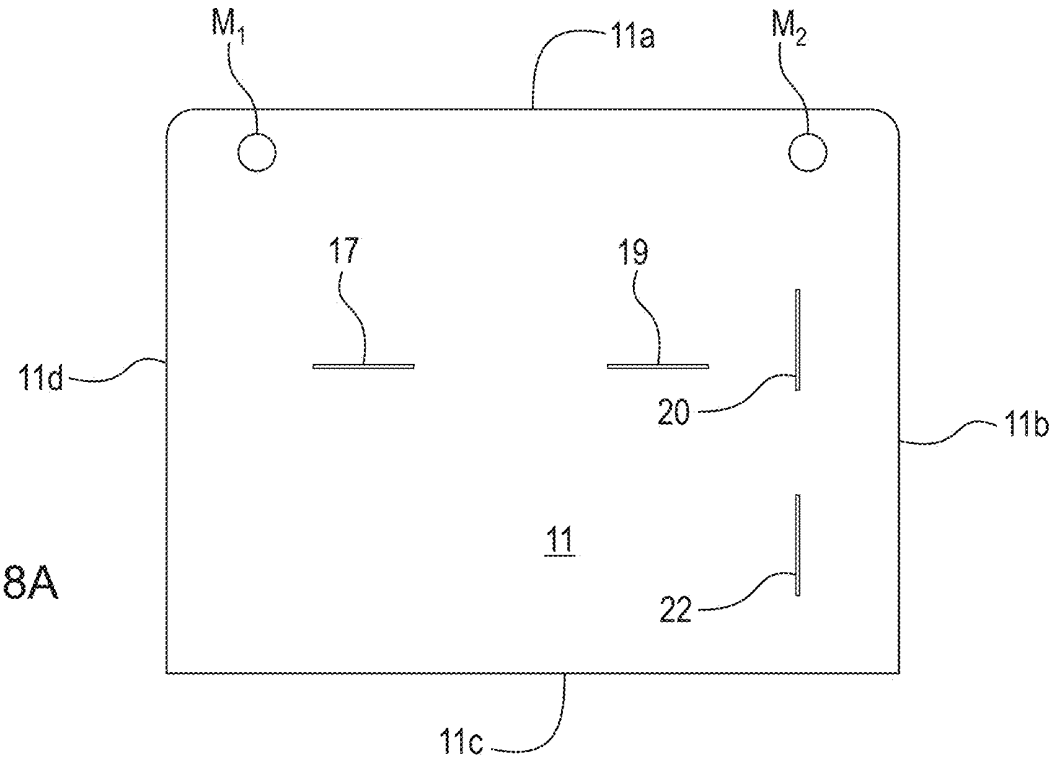
M1
11a
M2
17
19
11d
20
11b
11
22
11c

Fig. 8A

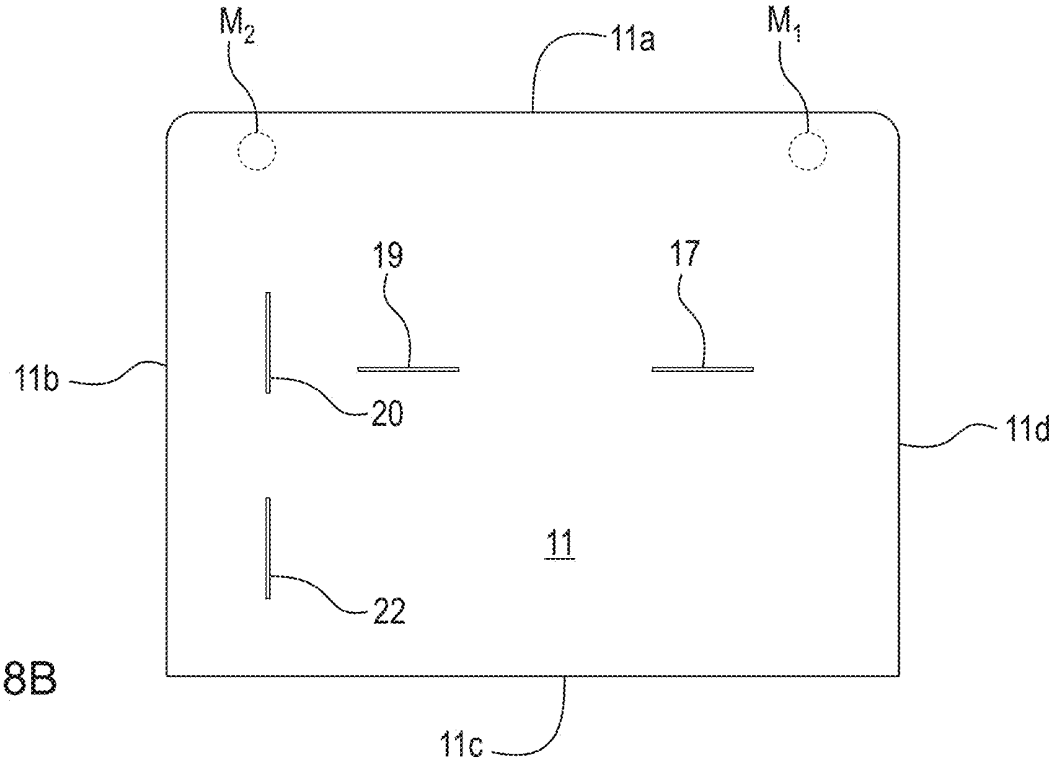
M2
11a
M1
19
17
11b
20
11d
11
22
11c

Fig. 8B

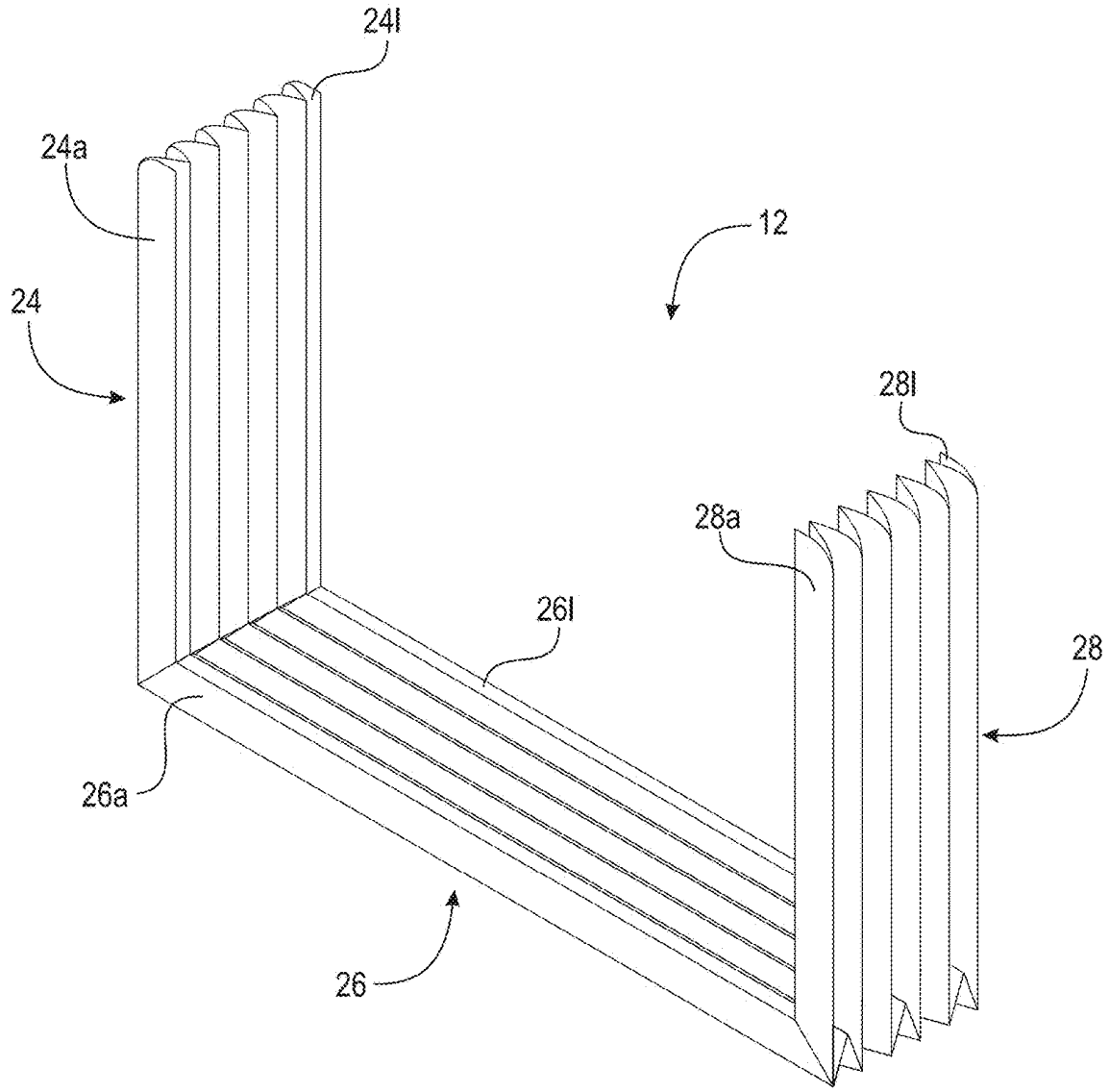

Fig. 9

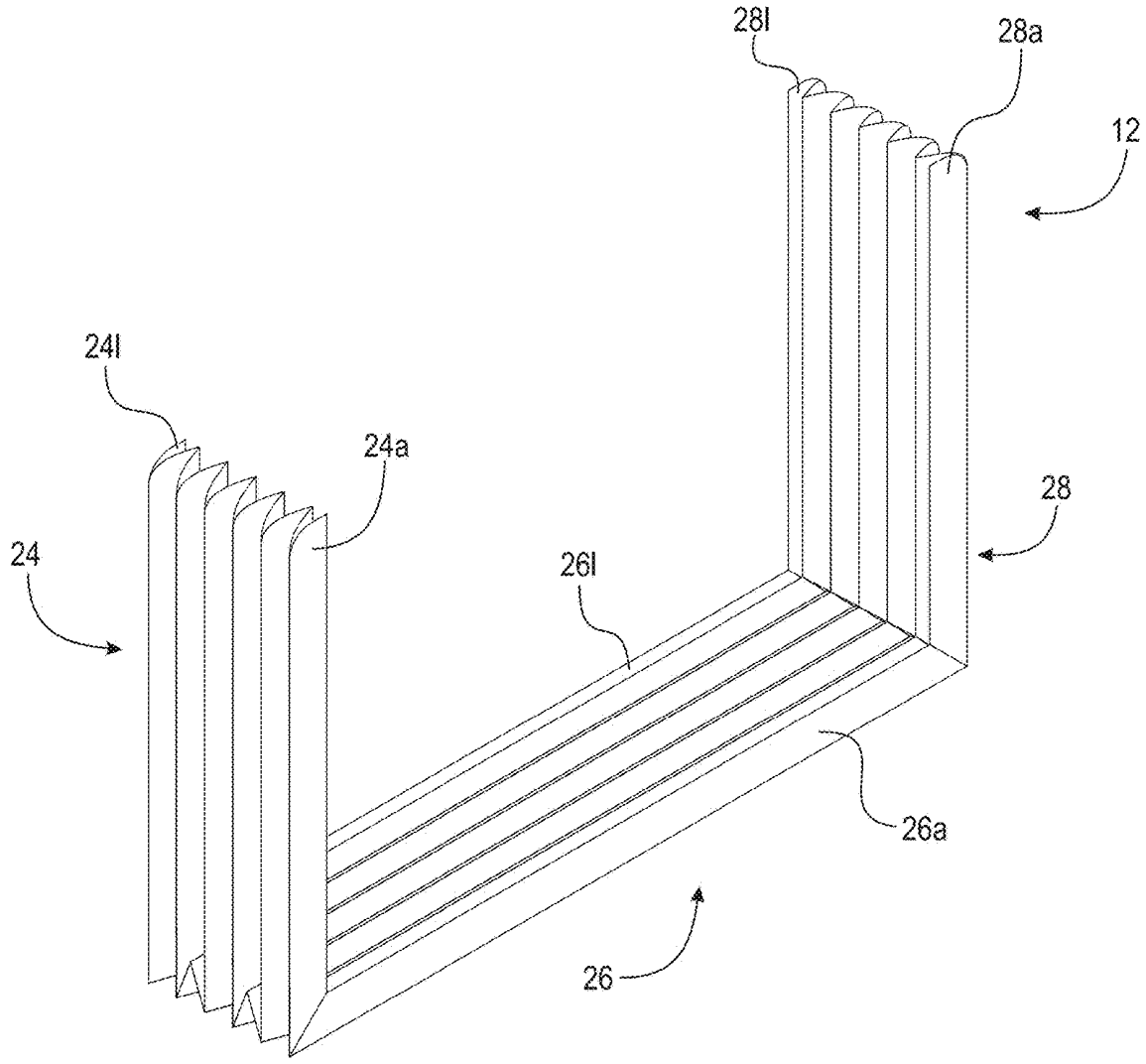

Fig. 10

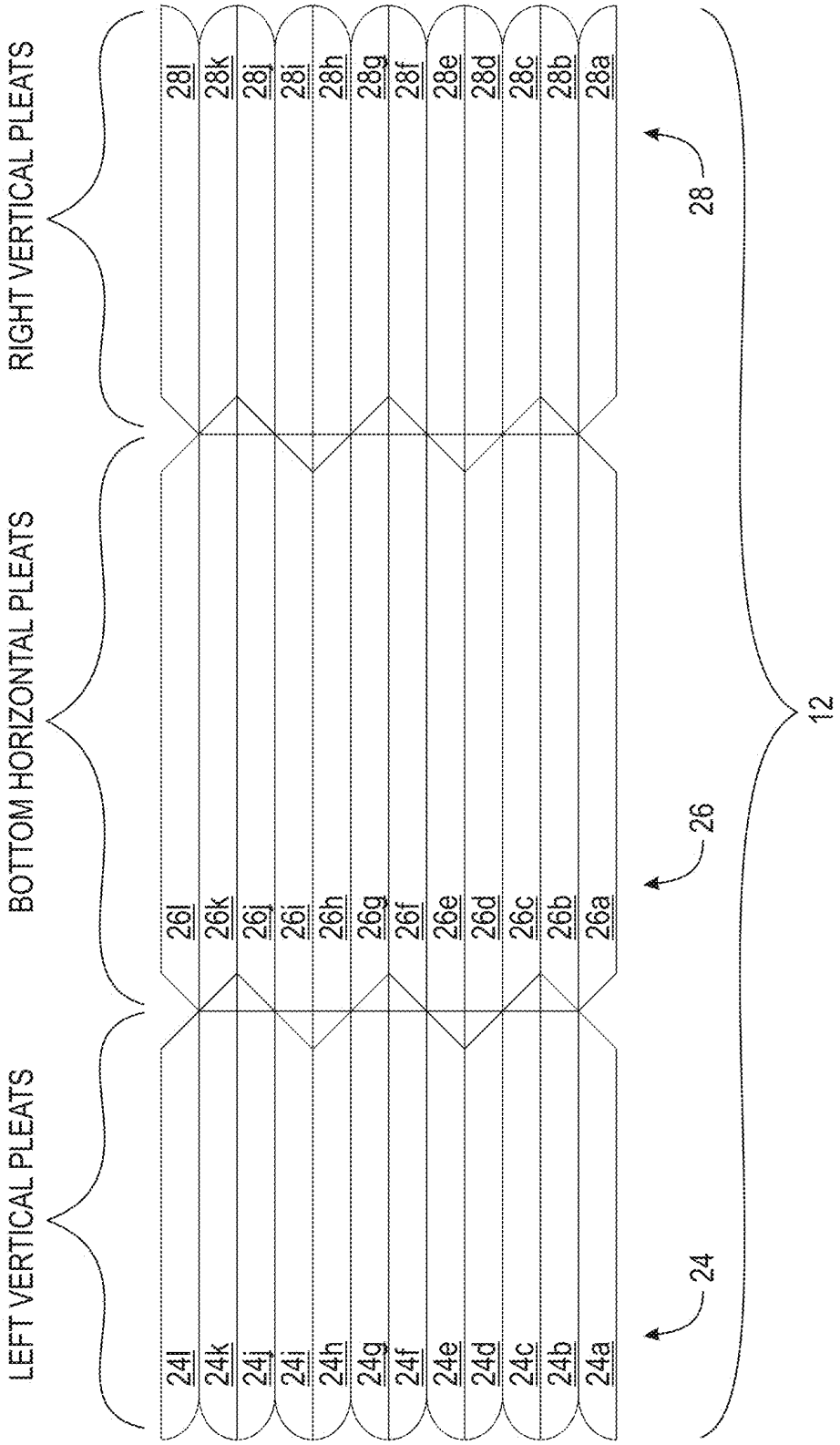
LEFT VERTICAL PLEATS
BOTTOM HORIZONTAL PLEATS
RIGHT VERTICAL PLEATS
24l 24k 24j 24i 24h 24g 24f 24e 24d 24c 24b 24a
26l 26k 26j 26i 26h 26g 26f 26e 26d 26c 26b 26a
28l 28k 28j 28i 28h 28g 28f 28e 28d 28c 28b 28a
24
26
28
12

Fig. 11

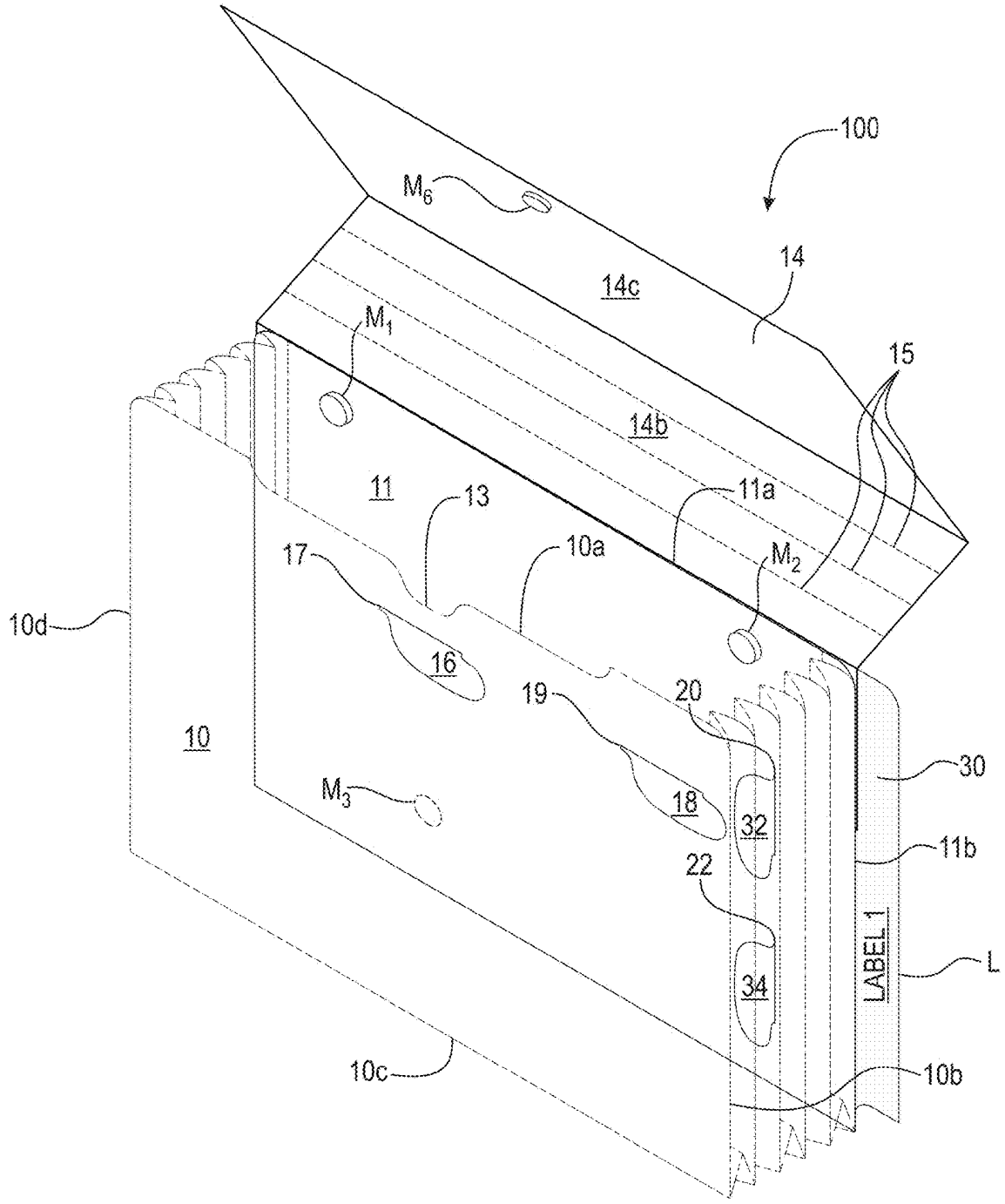
100
M6
14
14c
M1
15
14b
11
13
11a
17
10a
M2
10d
16
19
20
10
30
M3
18
32
11b
22
LABEL 1
L
34
10c
10b

Fig. 12

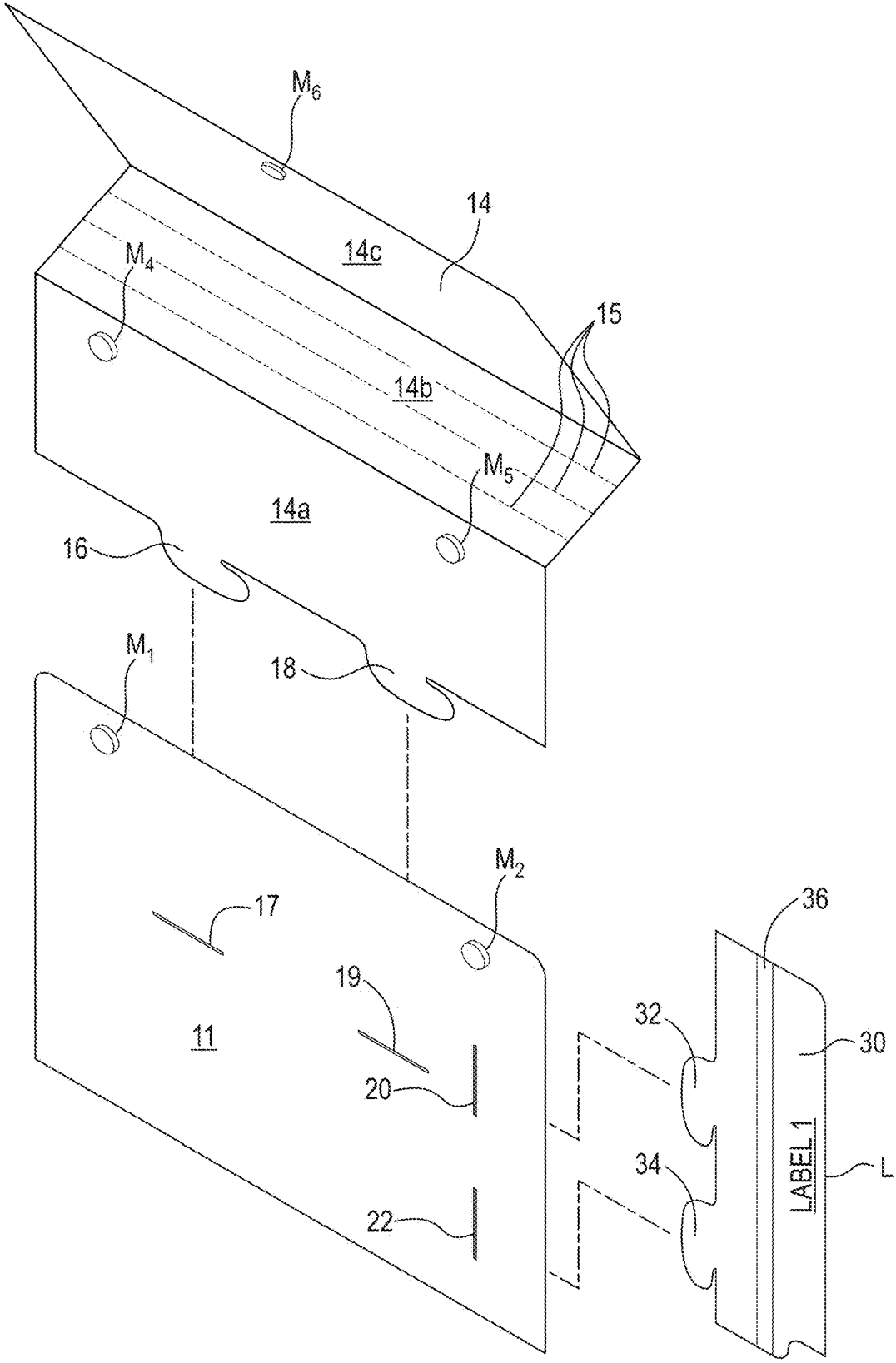
M6
14
14c
M4
15
14b
M5
14a
16
M1
18
M2
17
36
19
32
30
11
20
34
LABEL 1
L
22

Fig. 13

EXPANSION FILE FOLDER HAVING AT LEAST ONE OF A REMOVABLY SECURED COVER OR A REMOVABLY SECURED IDENTIFICATION INSERT

FIELD OF THE INVENTION

The present invention relates generally to an expansion file folder, and, more particularly, to an expansion file folder having at least one of a removably secured cover or a removably secured identification insert.

BACKGROUND OF THE INVENTION

Expansion file folders are well known in the art. Generally, expansion file folders have a pleated, accordion-like U-shaped expanding gusset that expands as paper or documents are added to the folder. The first gussets were constructed from an adhesive coated cloth which was used as a tape to hold a form and to pleat an accordion-folded gusset. Additionally, expansion file folders generally comprise a non-removable cover to protect the contents within the folder pocket, as well as non-removable tabs or outwardly facing surface areas used to write labels with identifying information upon. Expansion file folders have long been a preferred method of storing, transporting, and organizing documents.

When storing, transporting, or organizing a plurality of documents using expansion file folders, it is important to have a decipherable identification system. Expansion file folders typically accomplish this by using a label written directly on the expansion file folder, either on an outwardly facing surface of the expansion file folder, or on tabs that are protruding from the body of the expansion file folder. This type of labelling is permanent and cannot be altered or removed. Another feature of expansion file folders is the ability to cover the contents within the pocket of the folder when the folder is not in use, or when the folder is being stored. Typically, this is accomplished by a non-removable cover attached to the body of the expansion file folder. Over-use of the non-removable cover, from repeated opening and closing, or from forcing the cover to remain in an open position by bending the cover backwards, can cause the file folder to crease and tear at the junction where the cover is attached to the expansion file folder body. Various attempts to solve these problems have been contemplated and employed.

For example, U.S. Patent Application Publication No. 2008/0078818 discloses an expandable file box that includes an outwardly extending, generally flat cover flap. The cover flap includes a plurality of folding lines extending generally parallel to the upper portion of the main panel which enables the cover flap to fold in a generally forward position. The cover flap can be folded along the folding lines and disposed over the top opening of the expandable file folder and a portion of the front main panel of the front assembly.

Another example is shown in U.S. Pat. No. 7,407,469, which discloses an expandable file folder formed of a single sheet of material and includes two label sections to allow the expandable file folder to be labelled with identifying information. The use of fold lines within the flap allows for a label section between the fold lines, which can be marked with identifying information pertaining to the contents of the expandable file folder. The label section between the folds is readily visible when the expandable folder is on a shelf or in a drawer. Further, the exposed surface of the back of the folder can also be imprinted with a personalized label adhered by adhesive to show names, contents, years, etc.

Thus, there is a long felt need for an expansion file folder having a removably secured cover to decrease wear and tear due to repeated opening, closing or folding. A removably secured cover would increase the lifespan of the expansion file folder while also allowing for easier storage. Further, a removably secured identification insert allows a single folder to be reused with different labels as they are needed, also increasing the lifespan of the folder by not permanently marking the expansion file folder with labels that may become obsolete.

SUMMARY OF THE INVENTION

The present invention broadly comprises an expansion file folder, having a first wall and a second wall, each having four sides, the second wall having a pair of horizontal slots and a pair of vertical slots therein, a U-shaped pleated gusset, the gusset fixedly secured to three of the four sides of the first wall and fixedly secured to three of the four sides of the second wall, thereby forming an open pocket between the first and the second walls, the pocket having a pleated floor, and at least one of a cover having a pair of tabs extending therefrom, the pair of tabs of the cover arranged to removably engage the pair of horizontal slots, and an identification insert having a pair of tabs extending therefrom, the pair of tabs of the identification insert arranged to removably engage the pair of vertical slots.

The present invention also broadly comprises an expansion file folder, having a first wall and a second wall, each having four sides, the second wall having a pair of horizontal slots and a pair of vertical slots therein, a U-shaped pleated gusset, the gusset fixedly secured to three of the four sides of the first wall and fixedly secured to three of the four sides of the second wall, thereby forming an open pocket between the first and the second walls, the pocket having a pleated floor, and at least one of a cover having a pair of tabs extending therefrom, the pair of tabs of the cover arranged to removably engage the pair of horizontal slots, wherein the cover includes at least one magnet arranged therein and at least one of the first and the second walls having at least one of a magnet arranged thereon or therein, and a ferromagnetic piece thereon or therein, wherein the magnet of the cover is arranged to magnetically engage one of the magnets of at least one of the first and the second walls, and the ferromagnetic piece of at least one of the first and the second walls, and an identification insert having a pair of tabs extending therefrom, the pair of tabs of the identification insert arranged to removably engage the pair of vertical slots.

A general object of the invention is to provide an expansion file folder having a removably secured cover to decrease wear and tear due to repeated opening, closing or folding of the cover.

Another general object of the invention is to provide an expansion file folder having a removably secured identification insert that allows a single folder to be reused with different identification inserts as they are needed, increasing the lifespan of the folder.

A further object of the invention is to provide an expansion file folder having a U-shaped pleated gusset comprised of polypropylene.

Another object of the invention is to provide an expansion file folder where the first wall, the second wall, the cover,

and the identification insert are comprised of at least one of a plastic or polymer-like material, and a paperboard material.

A further object of the invention is to provide an expansion file folder where the identification insert incudes a vertical transverse strip of removable pressure sensitive adhesive.

These and other objects, features and advantages of the invention will become readily apparent to one having ordinary skill in the art upon study of the following detailed description in view of the drawings and appended claims.

BRIEF DESCRIPTION OF THE DRAWINGS

Various embodiments are disclosed, by way of example only, with reference to the accompanying schematic drawings in which corresponding reference symbols indicate corresponding parts, in which:

FIG. **1** illustrates a front perspective view of the fully assembled present invention in use with the cover open to expose the contents of the folder, and also showing an identification insert bearing a file label;

FIG. **2** illustrates a front perspective view of the present invention shown in FIG. **1** where the cover is closed;

FIG. **3** illustrates a front perspective view of the present invention shown in FIG. **1** where the cover and identification insert are removed;

FIG. **4** illustrates a front perspective view of the present invention shown in FIG. **3** where first wall **10** is partially cut-away to reveal the horizontal and vertical slots (**17**, **19** and **20**, **22**, respectively) in second wall **11**;

FIG. **5** illustrates a partially exploded view of the present invention shown in FIG. **4**;

FIG. **6**A illustrates a front perspective view of the inside of the second wall;

FIG. **6**B illustrates a front perspective view of the outside of the first wall;

FIG. **7** illustrates a rear perspective view of the present invention shown in FIG. **3**;

FIG. **8**A illustrates an orthogonal view of the inside of the second wall;

FIG. **8**B illustrates an orthogonal view of the outside of the second wall;

FIG. **9** illustrates a front-right perspective view of U-shaped pleated gusset **12**;

FIG. **10** illustrates a front-left perspective view of the U-shaped pleated gusset **12**;

FIG. **11** illustrates a flattened view of the outside surface of the U-shaped pleated gusset shown in FIGS. **9** and **10**;

FIG. **12** illustrates a front perspective view of the present invention shown in FIG. **1** where the first wall and U-shaped pleated gusset are cut-away to specially highlight the horizontal slots and vertical slots interacting with the cover tabs, and the identification insert tabs; and,

FIG. **13** illustrates a front perspective view of the cover and the identification insert being removably secured to the second wall by way of the horizontal and vertical slots.

DETAILED DESCRIPTION OF THE PREFERRED EMBODIMENT

At the outset, it should be appreciated that like reference numbers on different drawing figures represent identical structural elements. It should also be appreciated that, while a number of different embodiments and variations of the present invention are shown in the various drawings, the invention as claimed is not intended to be limited to these specific embodiments, as the claims define a broader invention that can take many different shapes and structures.

Adverting now to the drawings, FIG. **1** illustrates a front perspective view of an expansion file folder **100** in use, containing a plurality of documents P. Expansion file folder **100** comprises a first wall **10**, a second wall **11**, a U-shaped pleated gusset **12**, a removable cover **14**, and an identification insert **30**. In the exemplary embodiment in FIG. **1**, identification insert **30** contains printed indicia L. In the drawing, printed indicia L is the identifier "LABEL 1" but, of course, the indicia could be any identifier, such as a client name, customer name, patient name, docket number, file number, date, etc. Notably, expansion file folder **100** has a removably secured cover **14** and a removably secured identification insert **30**, discussed in further detail infra.

FIG. **2** illustrates a front perspective view of expansion file folder **100** in a closed position. Expansion file folder **100** comprises removably secured cover **14** in a closed position and removably secured identification insert **30** attached. Cover **14** has three (3) sections, a back section **14***a* (shown in FIG. **13**), a middle section **14***b*, and a front section **14***c*. The inside of front section **14***c* of cover **14** includes at least one magnet M_6 arranged therein or thereon, magnet M_6 is further arranged to magnetically engage a magnet M_3 (shown in FIG. **3**) positioned on the inside of first wall **10**, removably securing cover **14** to first wall **10**. It should be appreciated that one of magnet M_3 (shown in FIG. **3**) and magnet M_6 may comprise a ferromagnetic piece in lieu of a magnet. In other words, one of M_3 and M_6 could be a magnet while the other is a ferromagnetic piece. It should be further appreciated that there may be other ways in which cover **14** engages first wall **10** to be in a closed position, such as hook and loop fasteners or elastic cord closures.

FIG. **3** illustrates a front perspective view of expansion file folder **110**, where cover **14** and identification insert **30** are removed. Expansion file folder **110** comprises first wall **10** having a first, second, third, and fourth side **10***a*, **10***b*, **10***c*, and **10***d*, respectively. Magnet M_3 is affixed to or embedded in the inside surface of first wall **10**. First side **10***a* has an access notch **13**, allowing a person to easily grip expansion file folder **110** to open or adjust the size of the pocket. Second side **10***b* and fourth side **10***d* of first wall **10** are parallel and spaced apart from one another.

FIG. **4** illustrates a front perspective view of expansion file folder **110** shown in FIG. **3** where first wall **10** is partially cut-away to reveal second wall **11** having horizontal slots **17**, **19** and vertical slots **20**, **22** therein. Further, magnet M_3 is partially revealed on the inside surface of first wall **10**. In the exemplary embodiment in FIG. **4**, the inside of second wall **11** has two (2) magnets M_1, M_2 affixed to or embedded in the wall and arranged to magnetically engage magnets M_4, M_5 (shown in FIG. **13**), respectively, on cover **14**. It should be appreciated that the number of magnets arranged on second wall **11** and cover **14** can be one (1) or more, and that a pair of magnets arranged to attract one another could be replaced by one magnet and one ferromagnetic member.

FIG. **5** illustrates a partially exploded view of expansion file folder **110** shown in FIG. **4**. Expansion file folder **110** comprises first wall **10** and second wall **11**. Second wall **11** has a first, second, third, and fourth side **11***a*, **11***b*, **11***c*, and **11***d*, respectively. First side **11***a* and third side **11***c* of second wall **11** are parallel and spaced apart from one another, and second side **11***b* and fourth side **11***d* of second wall **11** are parallel and spaced apart from one another. In a preferred embodiment, first wall **10** and second wall **11** are comprised of at least one of a plastic or polymer-like material, or a paperboard material. Expansion file folder **110** further com-

prises U-shaped pleated gusset **12** having left vertical pleats **24**, bottom horizontal pleats **26**, and right vertical pleats **28**. In a preferred embodiment, U-shaped pleated gusset **12** is comprised of polypropylene. In a preferred embodiment, U-shaped pleated gusset **12** is fixedly secured to three sides **10***b*, **10***c*, **10***d* of first wall **10** and fixedly secured to three sides **11***b*, **11***c*, **11***d* of second wall **11**, thereby forming an open pocket between first wall **10** and second wall **11**. Second side **10***b* of first wall **10** is fixedly secured to a first right vertical pleat **28***a*. Third side **10***c* of first wall **10** is fixedly secured to a first bottom horizontal pleat **26***a*. Fourth side **10***d* of first wall **10** is fixedly secured to a first left vertical pleat **24***a*. Second side **11***b* of second wall **11** is fixedly secured to a twelfth right vertical pleat **28***l*. Third side **11***c* of second wall **11** is fixedly secured to a twelfth bottom horizontal pleat **26***l*. Fourth side **11***d* of second wall **11** is fixedly secured to a twelfth left vertical pleat **24***l*.

FIG. **6**A illustrates a front perspective view of the inside of second wall **11**. Second wall **11** has a first, second, third, and fourth side **11***a*, **11***b*, **11***c*, and **11***d*, respectively, horizontal slots **17**, **19**, vertical slots **20**, **22**, and magnets M_1, M_2 arranged on an inside of second wall **11** or embedded therein. First side **11***a* and third side **11***c* of second wall **11** are parallel and spaced apart from one another, and second side **11***b* and fourth side **11***d* of second wall **11** are parallel and spaced apart from one another.

FIG. **6**B illustrates a front perspective view of the outside of first wall **10**. First wall **10** has a first, second, third, and fourth side **10***a*, **10***b*, **10***c*, and **10***d*, respectively. Magnet M_3 is arranged on the inside surface of first wall **10** or embedded therein, further arranged to magnetically engage magnet M_6 (shown in FIG. **1**). First side **10***a* has access notch **13**, allowing a person to easily grip expansion file folder **110** to open or adjust the size of the pocket. It should be appreciated that the depth and shape of access notch **13** can vary. Second side **10***b* of first wall **10** and fourth side **10***d* of first wall **10** are parallel and spaced apart from one another.

FIG. **7** illustrates a rear perspective view of expansion file folder **110** shown in FIG. **3**. In the exemplary embodiment in FIG. **7**, first wall **10** and second wall **11** are parallel and spaced apart from one another, forming a pocket in which the bottom of the pocket comprises bottom horizontal pleats **26** (shown in FIG. **5**) of U-shaped pleated gusset **12**, and the sides of the pocket comprise left vertical pleats **24** and right vertical pleats **28** of U-shaped pleated gusset **12**.

FIGS. **8**A and **8**B illustrate an orthogonal view of the inside and outside of second wall **11**, respectively. Second wall **11** has a first, second, third, and fourth side **11***a*, **11***b*, **11***c*, and **11***d*, respectively, horizontal slots **17**, **19**, vertical slots **20**, **22**, and magnets M_1, M_2 arranged on or embedded in the inside of second wall **11**.

FIGS. **9** and **10** illustrate a front-right perspective view and a front-left perspective view of U-shaped pleated gusset **12**, respectively. U-shaped pleated gusset **12** comprises left vertical pleats **24**, bottom horizontal pleats **26**, and right vertical pleats **28**. In a preferred embodiment, U-shaped pleated gusset **12** is folded to create pleats, discussed below.

FIG. **11** illustrates a flattened view of the outside surface of U-shaped pleated gusset **12** shown in FIGS. **9** and **10**. U-shaped pleated gusset **12** comprises left vertical pleats **24**, bottom horizontal pleats **26**, and right vertical pleats **28**. Left vertical pleats **24** comprises twelve (12) pleats **24***a-l*, which includes first left vertical pleat **24***a* and twelfth left vertical pleat **24***l*. Bottom horizontal pleats **26** comprises twelve (12) pleats **26***a-l*, which includes first bottom horizontal pleat **26***a* and twelfth bottom horizontal pleat **24***l*. Right vertical pleats **28** comprises twelve (12) pleats **28***a-l*, which includes first right vertical pleat **28***a* and twelfth right vertical pleat **28***l*.

FIG. **12** illustrates a front perspective view of expansion file folder **100** shown in FIG. **1** where first wall **10** and U-shaped pleated gusset **12** are cut-away to reveal horizontal slots **17**, **19** and vertical slots **20**, **22** arranged within second wall **11**, interacting with cover tabs **16**, **18** extending from cover **14** and identification insert tabs **32**, **34** extending from identification insert **30**. First cover tab **16** is arranged to removably engage first horizontal slot **17**. Second cover tab **18** is arranged to removably engage second horizontal slot **19**. First identification insert tab **32** is arranged to removably engage first vertical slot **20**. Second identification insert tab **34** is arranged to removably engage second vertical slot **22**.

FIG. **13** illustrates a front perspective view of cover **14** and identification insert **30** being removably secured to second wall **11** by way of horizontal slots **17**, **19** and vertical slots **20**, **22**. Cover **14** has back section **14***a*, middle section **14***b*, and front section **14***c*. Back section of cover **14***a* has a first cover tab **16** and second cover tab **18** arranged to removably engage the pair of horizontal slots **17**, **19** in second wall **11**. In the exemplary embodiment in FIG. **13**, back section **14***a* of cover **14** also has two (2) magnets M_4, M_5 therein or thereon. Magnet M_4 is arranged to magnetically engage magnet M_1, and magnet M_5 is arranged to magnetically engage magnet M_2. Middle section **14***b* of cover **14** has a plurality of creases **15** which enable cover **14** to be closed with a variable amount of documents P within the pocket of expansion file folder **100**. Front section **14***c* of cover **14** has magnet M_6 arranged to magnetically engage magnet M_3 (shown in FIG. **3**). Identification insert **30** has a first identification insert tab **32** and a second identification insert tab **34** arranged to removably engage the pair of vertical slots **20**, **22** in second wall **11**. In a preferred embodiment, cover **14** and identification insert **30** are comprised of at least one of a plastic or polymer-like material, or a paperboard material. In another preferred embodiment, identification insert **30** has a vertical transverse strip of removable pressure sensitive adhesive **36**.

Thus, it is seen that the objects of the invention are efficiently obtained, although modifications and changes to the invention may be readily imagined by those having ordinary skill in the art, and these changes and modifications are intended to be within the scope of the claims.

REFERENCE NUMBERS

10 First wall
10*a* First side of first wall
10*b* Second side of first wall
10*c* Third side of first wall
10*d*Fourth side of first wall
11 Second wall
11*a* First side of second wall
11*b* Second side of second wall
11*c* Third side of second wall
11*d* Fourth side of second wall
12 U-shaped pleated gusset
13 Access notch
14 Removably secured cover
14*a* Back section of removably secured cover
14*b* Middle section of removably secured cover
14*c* Front section of removably secured cover
15 Creases
16 Tab
17 First horizontal slot
18 Tab

19 Second horizontal slot
20 First vertical slot
22 Second vertical slot
24 Left vertical pleats
24*a* First left vertical pleat
24*b* Second left vertical pleat
24*c* Third left vertical pleat
25*d* Fourth left vertical pleat
24*e* Fifth left vertical pleat
24*f* Sixth left vertical pleat
24*g* Seventh left vertical pleat
24*h* Eighth left vertical pleat
24*i* Ninth left vertical pleat
24*j* Tenth left vertical pleat
24*k* Eleventh left vertical pleat
24*l* Twelfth left vertical pleat
26 Bottom horizontal pleats
26*a* First bottom horizontal pleat
26*b* Second bottom horizontal pleat
26*c* Third bottom horizontal pleat
26*d* Fourth bottom horizontal pleat
26*e* Fifth bottom horizontal pleat
26*f* Sixth bottom horizontal pleat
26*g* Seventh bottom horizontal pleat
26*h* Eighth bottom horizontal pleat
26*i* Ninth bottom horizontal pleat
26*j* Tenth bottom horizontal pleat
26*k* Eleventh bottom horizontal pleat
26*l* Twelfth bottom horizontal pleat
28 Right vertical pleats
28*a* First right vertical pleat
28*b* Second right vertical pleat
28*c* Third right vertical pleat
28*d* Fourth right vertical pleat
28*e* Fifth right vertical pleat
28*f* Sixth right vertical pleat
28*g* Seventh right vertical pleat
28*h* Eighth right vertical pleat
28*i* Ninth right vertical pleat
28*j* Tenth right vertical pleat
28*k* Eleventh right vertical pleat
28*l* Twelfth right vertical pleat
30 Removably secured identification insert
32 Tab
34 Tab
36 Removable pressure sensitive adhesive
100 Expansion file folder including cover **14** and identification insert **30**
110 Expansion file folder without cover **14** and identification insert **30**
L Printed Indicia
M_1 Magnet
M_2 Magnet
M_3 Magnet
M_4 Magnet
M_5 Magnet
M_6 Magnet
P Documents

What is claimed is:

1. An expansion file folder, comprising:

a first wall and a second wall, each having four sides, the second wall having a pair of horizontal slots and a pair of vertical slots therein;

a U-shaped pleated gusset, the gusset fixedly secured to three of the four sides of the first wall and fixedly secured to three of the four sides of the second wall, thereby forming an open pocket between the first and the second walls, the pocket having a pleated floor; and,

at least one of:

a cover having a pair of tabs extending therefrom, the pair of tabs of the cover arranged to removably engage the pair of horizontal slots; and,

an identification insert having a pair of tabs extending therefrom, the pair of tabs of the identification insert arranged to removably engage the pair of vertical slots.

2. The expansion file folder of claim **1**, wherein the cover includes at least one magnet arranged therein and at least one of the first and the second walls having at least one of:

a magnet arranged thereon or therein; and,

a ferromagnetic piece thereon or therein, wherein the magnet of the cover is arranged to magnetically engage one of:

the magnets of at least one of the first and the second walls; and,

the ferromagnetic pieces of at least one of the first and the second walls.

3. The expansion file folder of claim **2**, wherein the U-shaped pleated gusset is comprised of polypropylene.

4. The expansion file folder of claim **3**, wherein the first and the second walls are comprised of at least one of:

a plastic or polymer-like material; and,

a paperboard material.

5. The expansion file folder of claim **4**, wherein the cover and identification insert are comprised of at least one of:

a plastic or polymer-like material; and,

a paperboard material.

6. The expansion file folder of claim **5**, wherein the identification insert incudes a vertical transverse strip of removable pressure sensitive adhesive.

7. An expansion file folder, comprising:

a first wall and a second wall, each having four sides, the second wall having a pair of horizontal slots and a pair of vertical slots therein;

a U-shaped pleated gusset, the gusset fixedly secured to three of the four sides of the first wall and fixedly secured to three of the four sides of the second wall, thereby forming an open pocket between the first and the second walls, the pocket having a pleated floor; and,

at least one of:

a cover having a pair of tabs extending therefrom, the pair of tabs of the cover arranged to removably engage the pair of horizontal slots, wherein the cover includes at least one magnet arranged therein and at least one of the first and the second walls having at least one of:

a magnet arranged thereon or therein; and,

a ferromagnetic piece thereon or therein, wherein the magnet of the cover is arranged to magnetically engage one of:

the magnets of at least one of the first and the second walls; and,

the ferromagnetic pieces of at least one of the first and the second walls; and,

an identification insert having a pair of tabs extending therefrom, the pair of tabs of the identification insert arranged to removably engage the pair of vertical slots.

8. The expansion file folder of claim **7**, wherein the U-shaped pleated gusset is comprised of polypropylene.

9. The expansion file folder of claim **8**, wherein the first and the second walls are each comprised of at least one of:

a plastic or polymer-like material; and,

a paperboard material.

10. The expansion file folder of claim **9**, wherein the cover and identification insert are comprised of at least one of:

a plastic or polymer-like material; and,

a paperboard material.

11. The expansion file folder of claim **10**, wherein the identification insert includes a vertical transverse strip of removable pressure sensitive adhesive.

* * * * *