US012789023B2

(12) **United States Patent**
Parasmo

(10) **Patent No.: US 12,789,023 B2**
(45) **Date of Patent: Nov. 10, 2026**

(54) **RADIATION PROTECTIVE GARMENT HAVING A WEIGHT-TRANSFERRING APPARATUS**

(71) Applicant: **Ronald Jarrod Parasmo**, Palm Beach Gardens, FL (US)

(72) Inventor: **Ronald Jarrod Parasmo**, Palm Beach Gardens, FL (US)

(*) Notice: Subject to any disclaimer, the term of this patent is extended or adjusted under 35 U.S.C. 154(b) by 0 days.

(21) Appl. No.: **18/812,259**

(22) Filed: **Aug. 22, 2024**

(65) **Prior Publication Data**

US 2026/0054104 A1 Feb. 26, 2026

(51) **Int. Cl.**
A62B 17/00 (2006.01)
A41D 27/20 (2006.01)
A61N 5/10 (2006.01)

(52) **U.S. Cl.**
CPC ***A62B 17/006*** (2013.01); ***A41D 27/20*** (2013.01); *A61N 2005/1094* (2013.01)

(58) **Field of Classification Search**
CPC A61F 5/026; A61N 2005/1094; A62B 17/006; A41D 1/04; A41D 13/01; A41D 27/20; G21F 3/02; G21F 3/03
See application file for complete search history.

(56) **References Cited**

U.S. PATENT DOCUMENTS

725,903 A * 4/1903 Wilcomb A41D 13/0012 2/94
1,495,489 A * 5/1924 Krause F41H 1/02 2/2.5
2,156,504 A * 5/1939 Liss H04R 25/04 381/385
2,304,574 A * 12/1942 Kirschenbaum ... A41D 13/0012 2/94
2,555,871 A * 6/1951 Caggiano G03B 15/03 224/639
3,055,133 A * 9/1962 Anderson A41D 1/04 2/253
3,451,064 A * 6/1969 Dolan A47C 9/025 297/4

(Continued)

FOREIGN PATENT DOCUMENTS

CA 2253050 A1 * 5/2000 ..... G21F 3/02
CN 204087830 U * 1/2015

(Continued)

Primary Examiner — Heather Mangine
Assistant Examiner — Raquel M. Weis
(74) *Attorney, Agent, or Firm* — Simpson & Simpson, PLLC

(57) **ABSTRACT**

A radiation protective garment, or a garment, having a front surface, a back surface, a waist portion and a shoulder portion, said garment to be worn by a person having a waist and shoulders, comprising, a first upper pocket arranged proximate the back surface and the shoulder portion, a second upper pocket arranged proximate the back surface and the shoulder portion, a first lower pocket arranged on the back surface and proximate the waist portion, a second lower pocket arranged on the back surface and proximate the waist portion, a first plurality of flexible rods supported by the first upper pocket and the first lower pocket, and a second plurality of flexible rods supported by the second upper pocket and the second lower pocket.

19 Claims, 9 Drawing Sheets

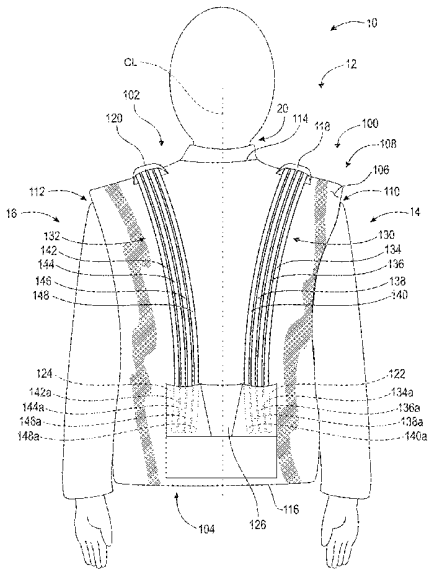

(56) **References Cited**

U.S. PATENT DOCUMENTS

4,328,533 A * 5/1982 Paredes A41D 13/01 362/108
4,417,146 A * 11/1983 Herbert G21F 3/03 250/516.1
4,422,719 A * 12/1983 Orcutt G02B 6/02033 362/582
D273,818 S * 5/1984 Spencer D3/227
4,467,476 A * 8/1984 Herbert G21F 3/03 2/2.5
4,539,700 A * 9/1985 Sato H04R 5/023 455/343.1
4,637,075 A * 1/1987 Ingrisano A61F 17/00 2/253
4,637,076 A * 1/1987 Tartt A41D 15/04 2/102
4,669,127 A * 6/1987 Swanson A41D 13/0012 2/46
4,876,724 A * 10/1989 Suzuki H05K 11/00 381/301
4,924,362 A * 5/1990 Janko H05K 1/038 362/240
5,070,436 A * 12/1991 Alexander G08B 5/004 362/108
5,249,106 A * 9/1993 Barnes A41D 13/01 362/108
5,424,922 A * 6/1995 Wise A41D 13/01 362/108
5,515,543 A * 5/1996 Gioello A41D 31/102 2/DIG. 1
5,555,490 A * 9/1996 Carroll G06F 1/163 2/905
5,671,480 A * 9/1997 Krout A41D 13/0125 441/89
5,722,573 A * 3/1998 Carnel A45F 3/16 224/148.2
5,803,667 A * 9/1998 Seligman B63C 11/30 405/185
5,834,789 A * 11/1998 Marchione G21F 3/02 250/516.1
5,844,246 A * 12/1998 Marchione G21F 3/02 250/516.1
6,085,698 A * 7/2000 Klein A41D 13/01 119/859
6,106,130 A * 8/2000 Harding G08B 5/004 362/108
6,185,738 B1 * 2/2001 Sidebottom F41H 1/02 2/2.5
6,267,482 B1 * 7/2001 Miller G02B 6/0053 362/108
6,405,378 B1 * 6/2002 Garner A41D 15/04 2/102
6,449,770 B1 * 9/2002 Taylor A41D 13/0007 128/869
6,478,510 B1 * 11/2002 Young B63C 11/08 441/106
6,517,214 B1 * 2/2003 Mitchell, Jr. A41D 13/01 362/240
6,991,343 B2 * 1/2006 Langley A41D 13/0518 362/108
6,997,573 B2 * 2/2006 Maese A41D 13/01 362/108
7,281,813 B2 * 10/2007 Golle A41D 13/01 362/108
7,440,581 B2 * 10/2008 Wiener H04R 5/023 381/301
7,549,179 B1 * 6/2009 Saied A41D 13/0012 2/114
7,865,975 B2 * 1/2011 Davies A61F 5/026 2/310
8,067,759 B1 * 11/2011 Swartz G21F 3/02 2/92
8,353,065 B1 * 1/2013 Crye F41H 1/02 2/2.5
8,598,554 B2 * 12/2013 Rees G21F 3/02 250/516.1
8,710,477 B1 * 4/2014 Marchione A41D 13/0025 2/457
8,756,718 B2 * 6/2014 Tymofy A41D 31/14 2/256
8,997,262 B2 * 4/2015 Klein A45F 3/08 2/2.5
9,185,964 B2 * 11/2015 Crye A45F 3/047
RE46,069 E * 7/2016 GibsonHorn A63B 21/4005
9,603,393 B2 3/2017 Crye
9,629,443 B2 * 4/2017 Searle A45F 3/10
9,746,165 B2 * 8/2017 Ritter F21V 21/145
9,999,290 B2 * 6/2018 Klein A45F 3/08
10,165,847 B2 * 1/2019 Chapman A45F 3/10
10,786,054 B1 * 9/2020 Rosado A45B 11/02
10,856,588 B2 * 12/2020 Ward A41D 13/0012
11,200,993 B2 * 12/2021 Gerges A61B 6/107
11,202,479 B2 * 12/2021 Collins A45F 3/14
2002/0152533 A1 * 10/2002 Lesley A41D 13/01 2/102
2003/0196243 A1 * 10/2003 Tadros A45F 4/00 2/89
2004/0114350 A1 * 6/2004 Golle A41D 1/04 362/108
2004/0117890 A1 * 6/2004 Golle A41D 1/04 2/102
2005/0045687 A1 * 3/2005 Willows A41D 13/01 224/637
2006/0242799 A1 * 11/2006 Flossner A41D 13/0012 24/3.7
2007/0012261 A1 * 1/2007 Altieri A01K 1/029 119/770
2007/0074327 A1 * 4/2007 Davies A61F 5/026 2/44
2007/0105404 A1 * 5/2007 Lee H01R 12/592 439/37
2008/0047046 A1 * 2/2008 Maier A41D 1/04 2/102
2008/0188785 A1 * 8/2008 Shutes A41D 13/05 2/467
2008/0201818 A1 * 8/2008 Nilforushan A61F 7/02 607/114
2008/0301863 A1 * 12/2008 Goff A41D 13/0012 2/467
2010/0144490 A1 * 6/2010 Purdy A63B 21/4007 2/69
2010/0319102 A1 * 12/2010 Kemper A41D 13/1209 2/114
2011/0038142 A1 * 2/2011 Ritter F21V 21/145 362/108
2011/0043755 A1 * 2/2011 Gibson-Horn A61F 5/028 351/203
2011/0055992 A1 * 3/2011 Roux F41H 1/02 2/2.5
2012/0233749 A1 * 9/2012 Tymofy A41D 31/14 2/463
2013/0091624 A1 * 4/2013 Czajka A41D 13/1209 2/456
2013/0094189 A1 * 4/2013 Kimitri A41D 13/01 362/108
2014/0022766 A1 * 1/2014 Wright G08B 5/004 362/108
2014/0245529 A1 * 9/2014 Beckman A41D 13/0531 2/455
2014/0361058 A1 * 12/2014 Gill A45F 3/047 224/259
2015/0004131 A1 * 1/2015 Milstein A61P 39/00 250/516.1
2015/0200045 A1 * 7/2015 Mathieu A45F 5/02 335/286
2016/0050995 A1 * 2/2016 Bentley A41D 27/207 2/114

(56) **References Cited**

U.S. PATENT DOCUMENTS

2016/0069647	A1*	3/2016	Crye	A45F 3/047 2/102
2017/0095063	A1*	4/2017	Rowell	A45F 3/14
2018/0140078	A1*	5/2018	Williamson	A41D 1/002
2018/0161617	A1*	6/2018	Rao	A41D 31/00
2018/0228235	A1*	8/2018	Truelove, III	A41F 19/00
2019/0080810	A1*	3/2019	Arvin	G21F 1/12
2019/0304613	A1*	10/2019	Gerges	G21F 3/02
2020/0068964	A1*	3/2020	Brandt	A41D 27/20
2020/0155264	A1	5/2020	Waterman et al.	
2020/0178678	A1*	6/2020	Collins	A45F 3/14
2020/0305581	A1*	10/2020	Barklow	A41D 13/0007
2020/0353891	A1*	11/2020	Turjeman	B60R 22/30
2021/0378331	A1*	12/2021	Kassab	A45F 3/10
2022/0142803	A1*	5/2022	Ochoa	A61F 5/026
2023/0030890	A1*	2/2023	Baggen	F41H 1/02
2023/0117365	A1*	4/2023	North	A61B 5/346 600/301
2023/0320437	A1*	10/2023	Lemerick	A63B 21/0555 2/244
2023/0320883	A1*	10/2023	Ross	A41B 1/00 602/69
2023/0389677	A1*	12/2023	Flohr	A61B 6/107
2024/0041189	A1*	2/2024	Schwager	A45F 3/047
2024/0276964	A1*	8/2024	Drinkard	A45F 3/04
2026/0054104	A1*	2/2026	Parasmo	A41D 27/20

FOREIGN PATENT DOCUMENTS

CN	218999596	U *	5/2023	
EP	2488131	B1 *	11/2015	A61F 5/05841
GB	2462477	A *	2/2010	A63B 21/0602
RU	136299	U1 *	1/2014	
RU	2516842	C2 *	5/2014	
RU	2640991	C1 *	1/2018	

* cited by examiner

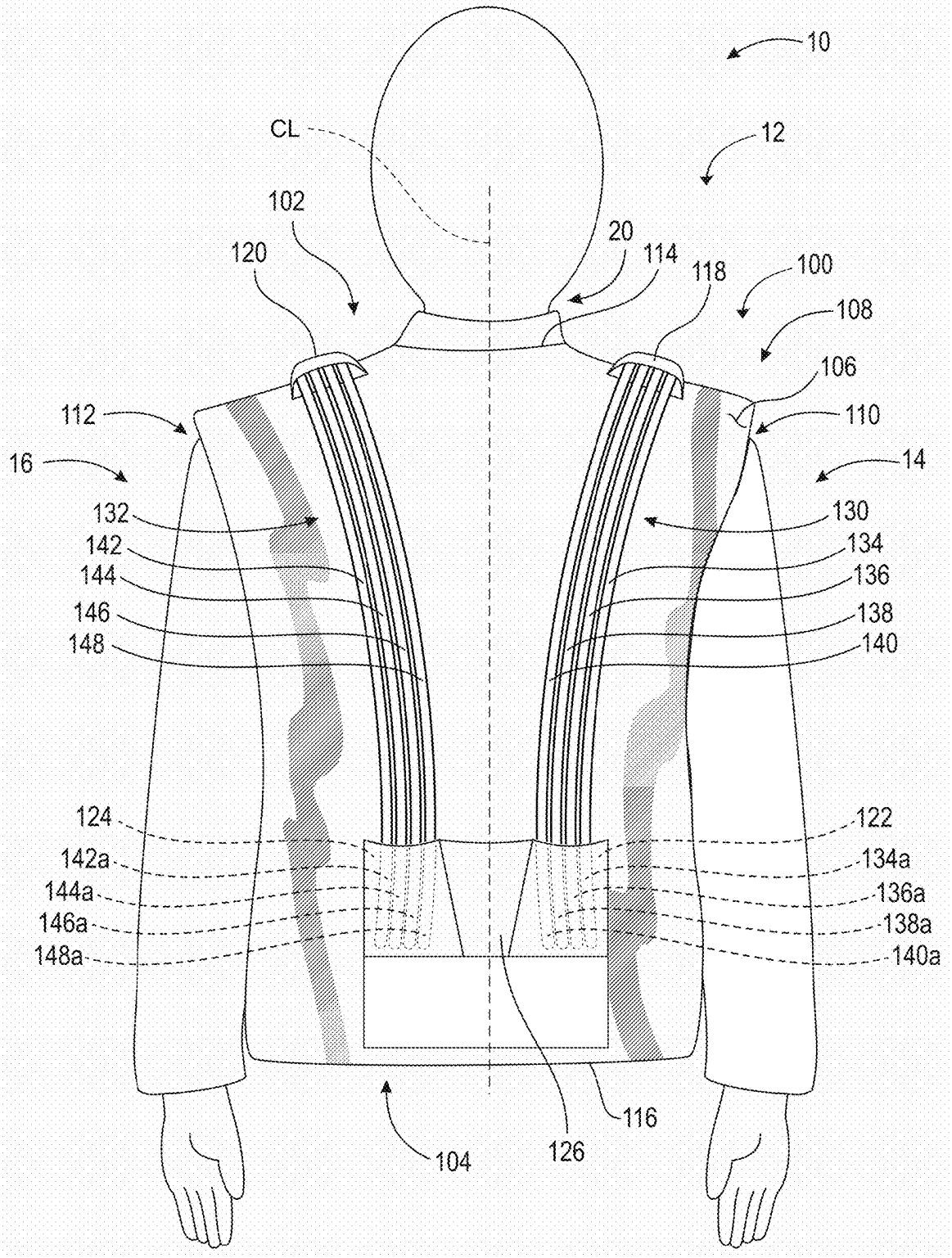
10
CL
12
102
20
120
114
118
100
108
106
112
110
16
14
132
130
142
134
144
136
146
138
148
140
124
122
142a
134a
144a
136a
146a
138a
148a
140a
116
104
126

Fig. 1

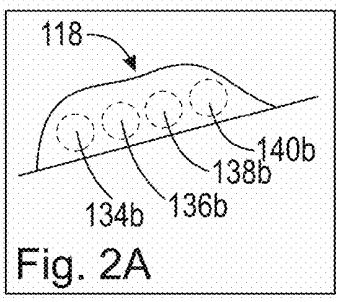

Fig. 2A

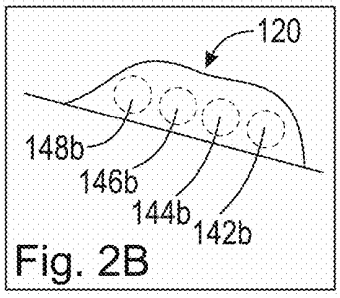

Fig. 2B

Fig. 2

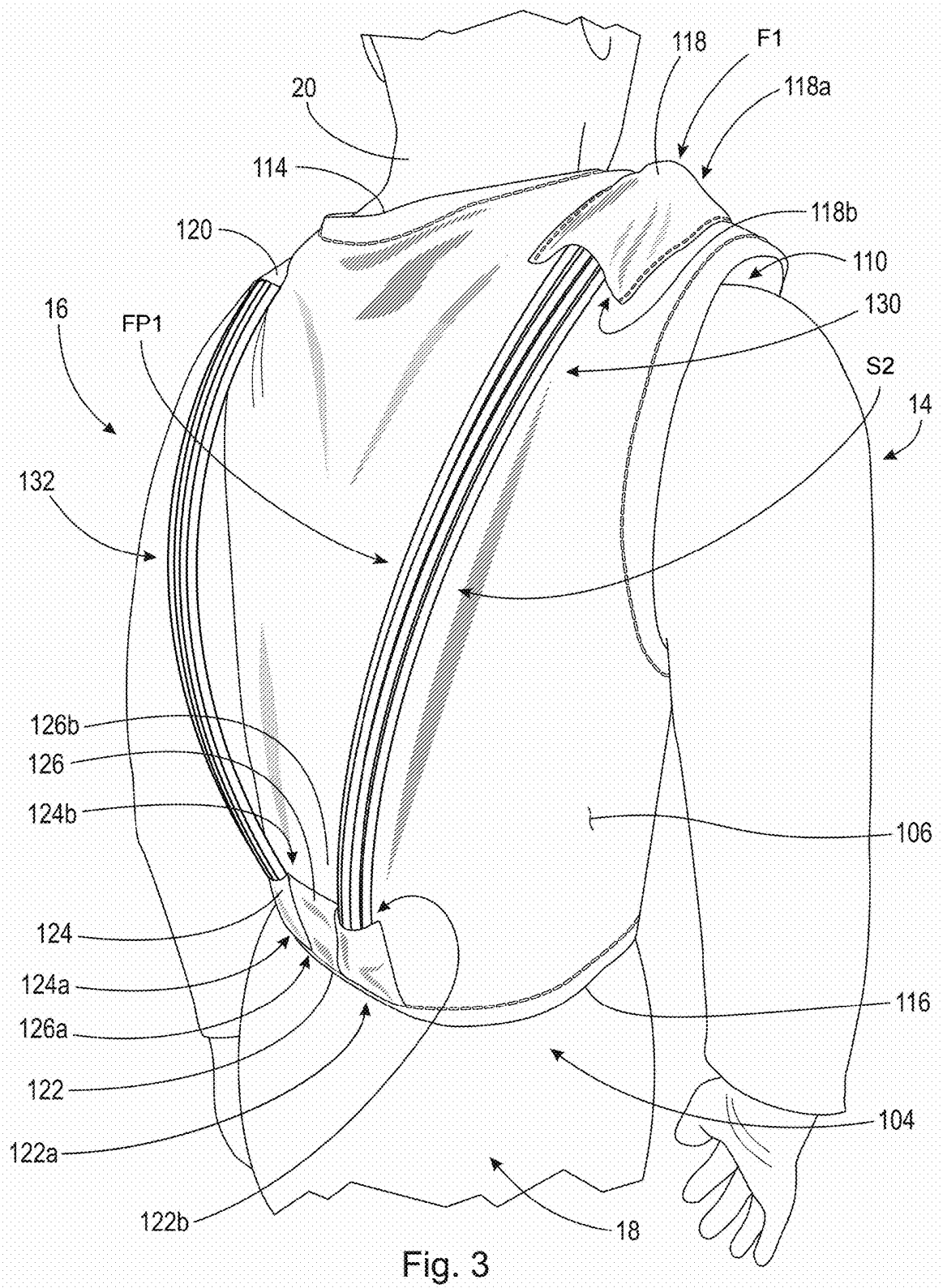
118
F1
118a
20
114
118b
120
110
16
FP1
130
S2
14
132
126b
126
124b
106
124
124a
116
126a
122
104
122a
122b
18

Fig. 3

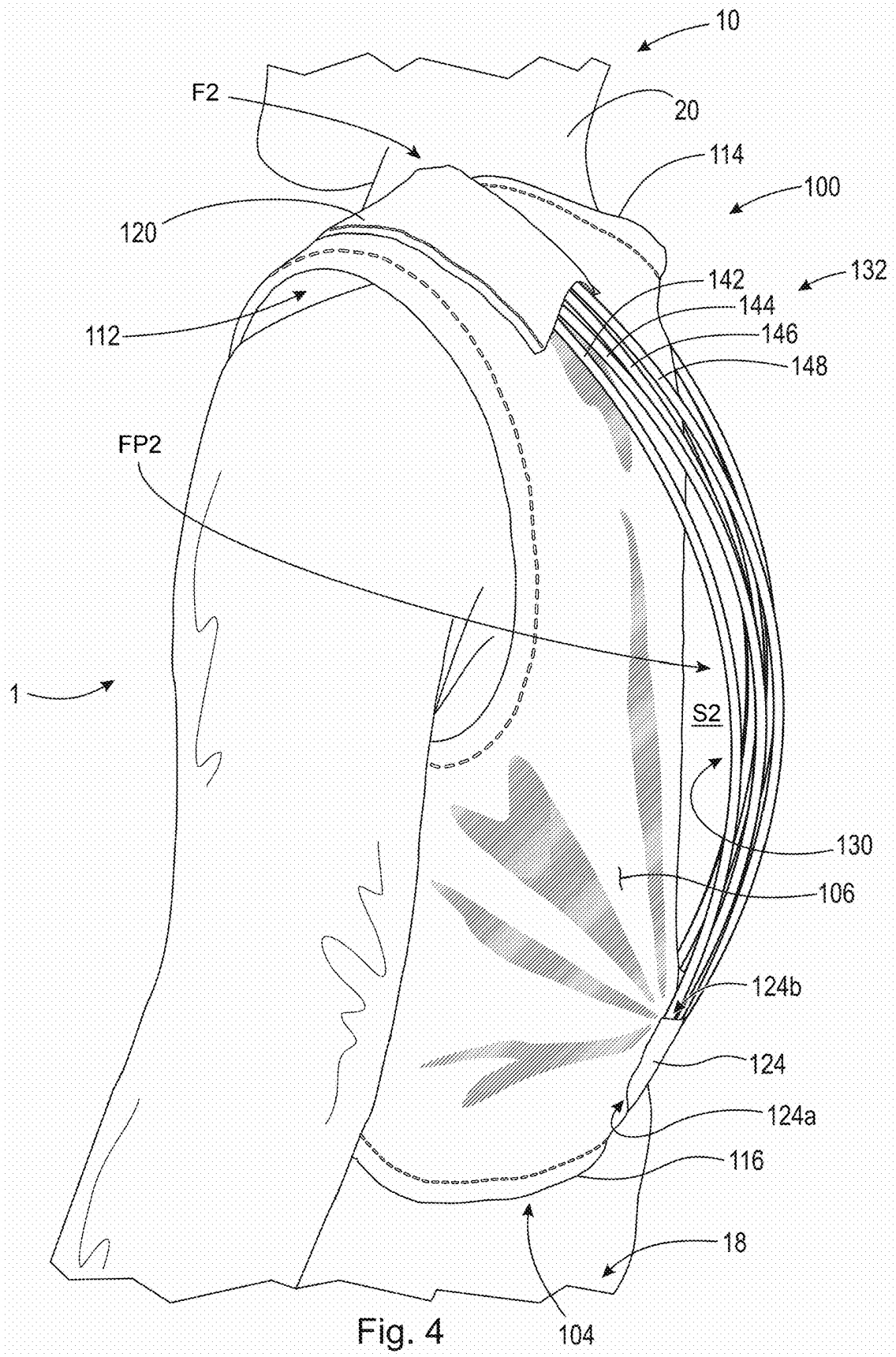
10
F2
20
114
100
120
142
132
144
112
146
148
FP2
1
S2
130
106
124b
124
124a
116
18
104

Fig. 4

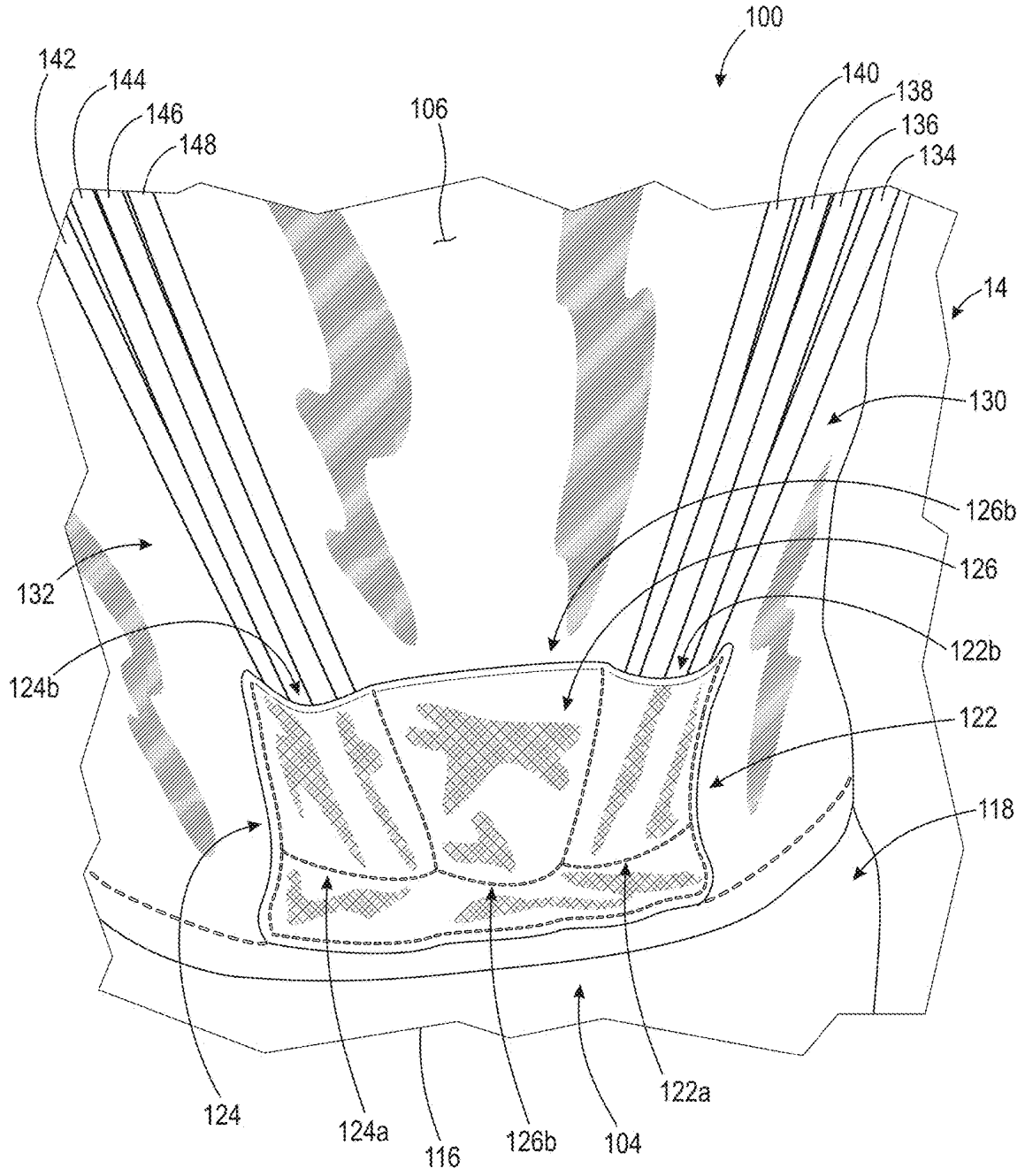
100
142
144
146
148
106
140
138
136
134
14
130
126b
126
122b
122
118
132
124b
124
124a
116
126b
104
122a

Fig. 5

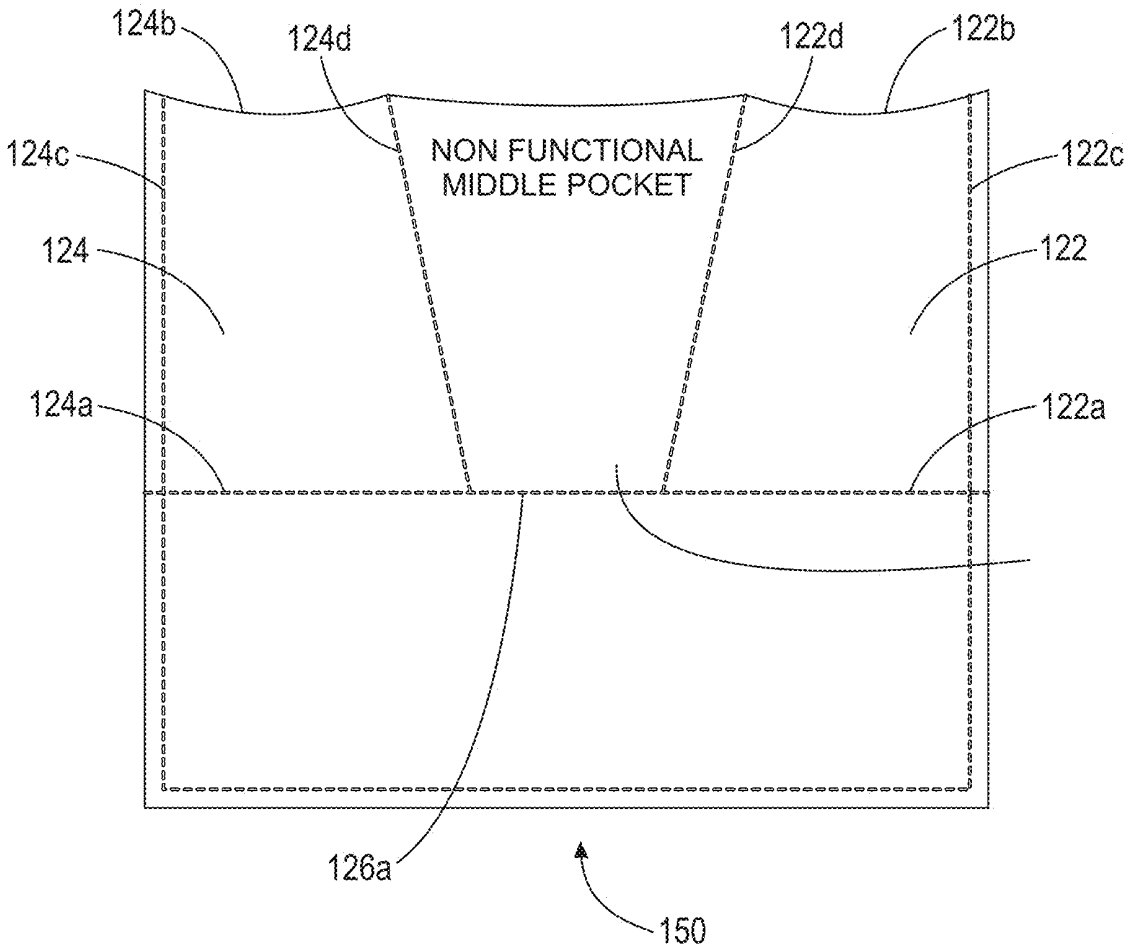
124b
124d
122d
122b
NON FUNCTIONAL
MIDDLE POCKET
124c
122c
124
122
124a
122a
126a
150

Fig. 6

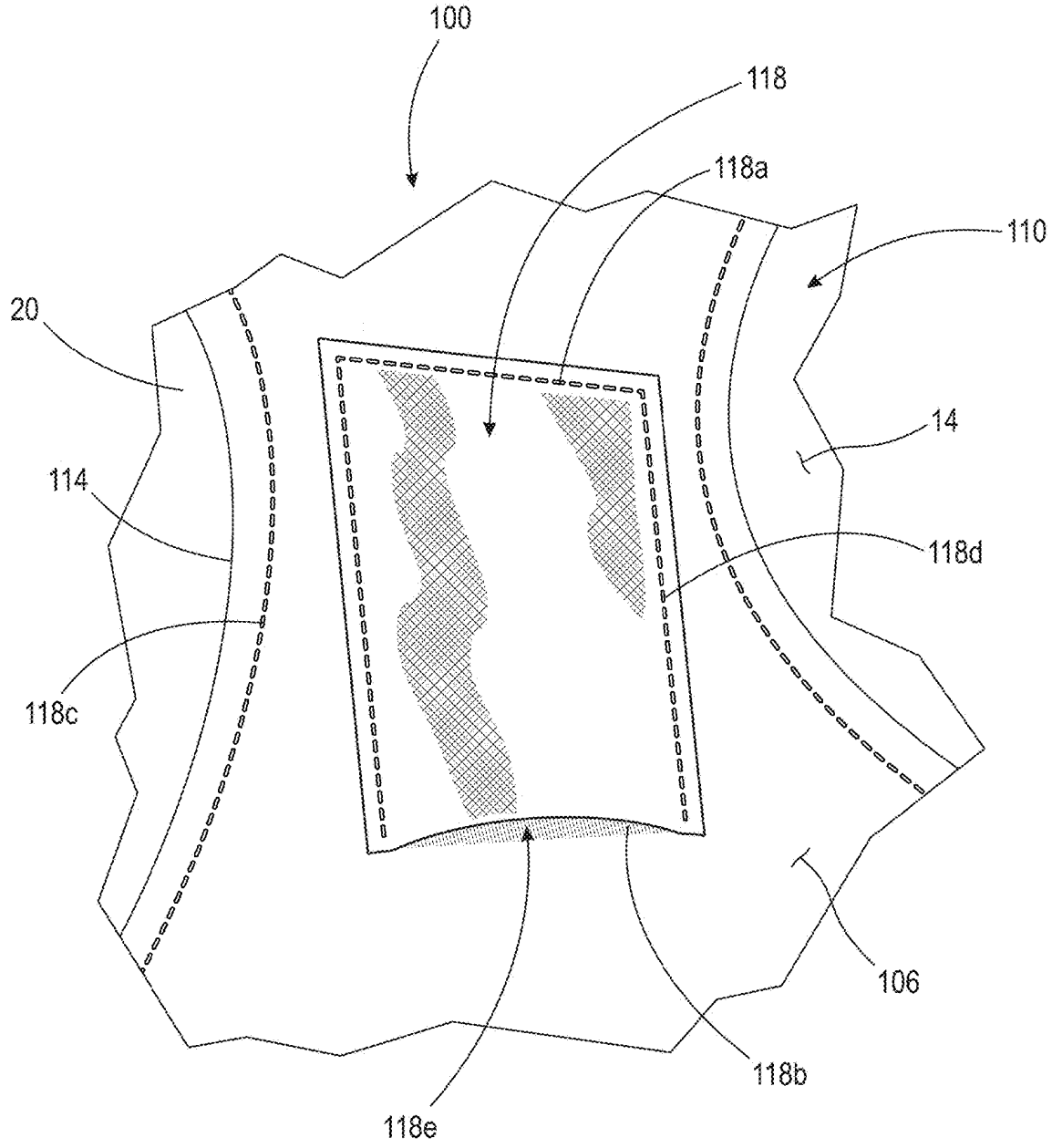

Fig. 7

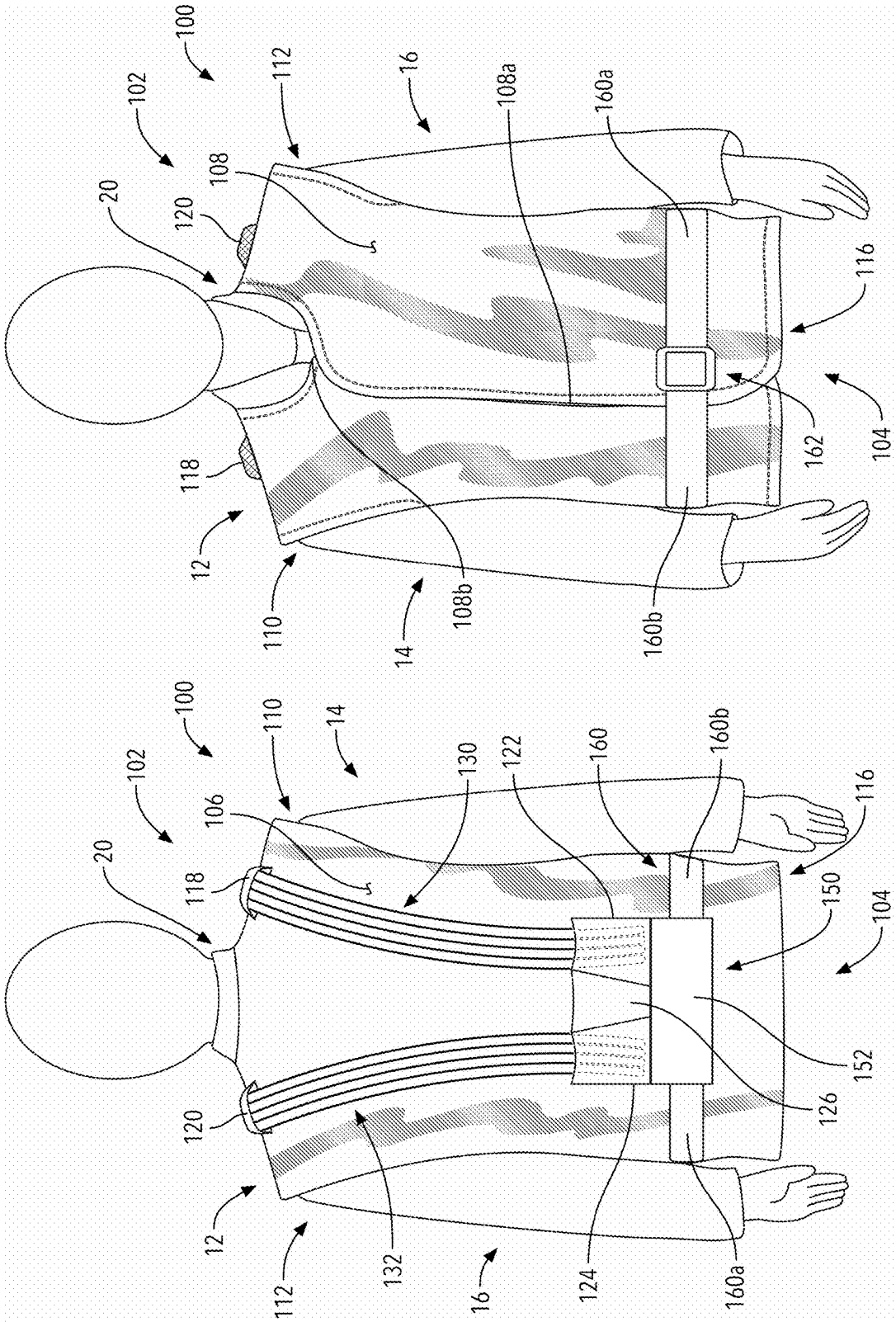
100
102
112
16
108a
160a
108
20
120
116
104
162
118
12
110
14
108b
160b
100
102
110
14
130
122
160
160b
106
116
20
118
150
104
152
120
126
12
112
132
16
124
160a

Fig. 8B

Fig. 8A

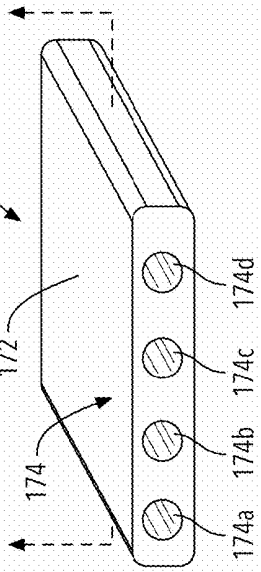

Fig. 10A

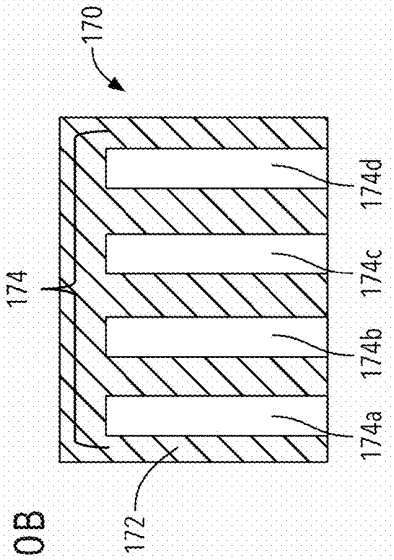

Fig. 10B

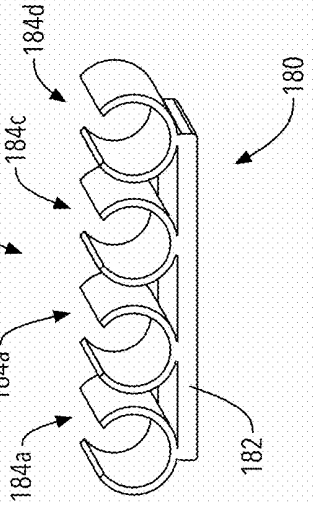

Fig. 11

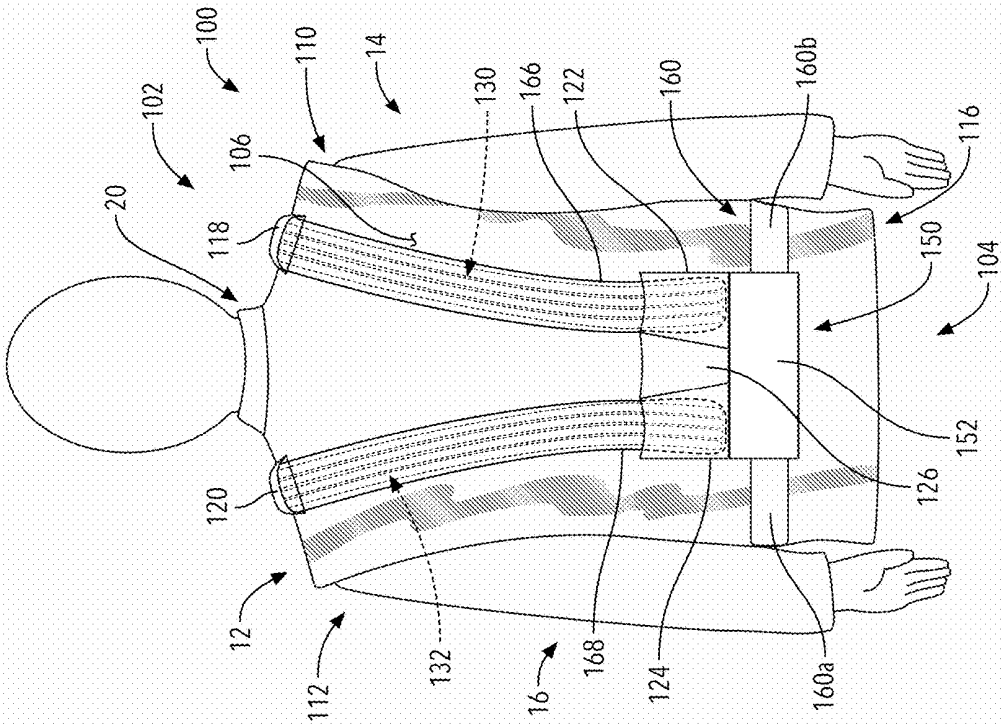

Fig. 9

RADIATION PROTECTIVE GARMENT HAVING A WEIGHT-TRANSFERRING APPARATUS

FIELD

The present invention relates to an x-ray apron having a weight-transfer apparatus and generally, the present invention may relate to a weight-transfer apparatus for heavy and/or weighted articles of clothing.

BACKGROUND

Radiation shielding materials are used for a variety of radiologic applications, such as X-rays. The use of radiation in diagnosing and treating patients has significantly advanced the field of medicine and saved or extended countless lives. Advances in technology and more sophisticated applications have improved standard treatments for the benefit of the patient. Radiation use does, however, come with risks. Those who use radiation, radiologists, doctors, etc., must be adequately trained in radiation safety, radiation physics, the biologic effects of radiation, and injury prevention to ensure patient safety. One major principle of mitigating external radiation exposure is shielding. Shielding means using absorber material, such as Plexiglas for beta particles and lead for X-rays and gamma rays, to reduce radiation exposure.

There are three predominant radiation shielding materials, lead (Pb), lead composites (a combination of lead and other lighter weight metals or materials, e.g., tin, rubber, PVC vinyl, etc.), and non-lead or lead free (e.g., tin (Sn), antimony (Sb), tungsten (W) bismuth (Bi) or other elements). Typically, medical professionals who may exposed to radiation, use "x-ray aprons", which are articles of clothing having one of the three aforementioned shielding materials inserted into, or woven into, or a combination thereof.

X-ray aprons can come in a variety of clothing designs, such as an apron style having only a frontal covering or a rear and a frontal covering, vests, long sleeves, etc. If shielding material is added to a traditional article of clothing, any apparel can become an X-ray apron.

Of the three general types of radiation shielding material, lead is the most commonly used in x-ray aprons, and also the heaviest. Although a lead composition x-ray apron can be approximately 25% lighter than an entirely lead x-ray apron, and non-lead, or lead free x-ray aprons can be approximately 40% lighter than an entirely lead x-ray apron, x-ray aprons are still much heavier than typical clothing.

The additional weight of an x-ray apron, in combination with extended wear of the x-ray apron, i.e., four to five days a week for at least seven hours, can create a plurality of problems for the medical provides, e.g., back pain and/or soreness, poor or degraded posture, increased fatigue, etc.

Thus, there is a long-felt need for a radiation protective garment having at least one weight transferring apparatus, specifically, at least one weight transferring apparatus arranged to transfer a weight of the radiation protective garment, or other weighted garment, from shoulders of a user to proximate a waist of the user, or hips of the user.

SUMMARY

Generally, the present invention comprises a radiation protective garment having a front surface, a back surface, a waist portion and a shoulder portion, said protective garment to be worn by a person having a waist and shoulders, comprising, a first upper pocket arranged proximate the back surface and the shoulder portion, a second upper pocket arranged proximate the back surface and the shoulder portion, a first lower pocket arranged on the back surface and proximate the waist portion, a second lower pocket arranged on the back surface and proximate the waist portion, a first plurality of flexible rods supported by the first upper pocket and the first lower pocket, and a second plurality of flexible rods supported by the second upper pocket and the second lower pocket.

In some arrangements, the radiation protective garment may further comprise a third lower pocket arranged between the first and second lower pockets on the back surface.

In other configurations, the first plurality of flexible rods and the second plurality of flexible rods of the radiation protective garment each comprise four flexible rods.

In further aspects, each of said flexible rods of the first and second plurality of flexible rods of the radiation protective garment are comprised of fiberglass.

In other embodiments, The first and second lower pockets of radiation protective garment are arranged substantially proximate a center line of the back surface.

In some configurations, the first plurality of flexible rods of the radiation protective garment have a first flex point when supported by the first upper pocket and the first lower pocket; and, the second plurality of flexible rods of the radiation protective garment have a second flex point when support by the second upper pocket and the second lower pocket.

In other arrangements, when the radiation protective garment is worn by the person, the shoulder portion is substantially elevated above the shoulders of the person when the first plurality of flexible rods are supported by the first upper pocket and the first lower pocket; and, the second plurality of flexible rods are supported by the second upper pocket and the second lower pocket.

In some embodiments, the aforementioned garment may further include a belt secured proximate the waist portion on the rear surface.

It should be noted that the present invention may be used in conjunction with other weighted garments. As such, the present invention could also comprise a garment having a front surface, a back surface, a waist portion and a shoulder portion, the garment to be worn by a person having a waist and shoulders, further comprising: a first upper pocket arranged proximate the back surface and the shoulder portion; a second upper pocket arranged proximate the back surface and the shoulder portion; a first lower pocket arranged on the back surface and proximate the waist portion; a second lower pocket arranged on the back surface and proximate the waist portion; a first at least one flexible rod removably arranged within the first upper pocket and the first lower pocket; and, a second at least one flexible rod removably arranged within the second upper pocket and the second lower pocket, wherein when the rods are seated within the respective pockets they are flexed and extend away from the back surface.

The aforementioned garment may further comprise a support belt secured proximate the waist portion on the back surface, the belt comprising a first section and a section adapted to be removably secured proximate the front surface, adapted to afford a selectable circumference of the joined first and second sections, thereby allowing a selective about of compression to be imparted by the first and second sections on the waist portion.

In some embodiments, the first at least one flexible rod of the aforementioned garment may comprise a first plurality of

flexible rods; and, the second at least one flexible rod of the aforementioned garment may comprise a second plurality of flexible rods.

In another possible embodiment, the first plurality of flexible rods of the aforementioned garment may comprise at least four flexible rods; and, the second plurality of flexible rods of the aforementioned garment may comprise at least four flexible rods.

These and other objects, features, and advantages of the present invention will become readily apparent upon a review of the following detailed description of the invention, in view of the drawings and appended claims.

BRIEF DESCRIPTION OF THE DRAWINGS

Various embodiments are disclosed, by way of example only, with reference to the accompanying schematic drawings in which corresponding reference symbols indicate corresponding parts, in which:

FIG. **1** is a rear view of the present invention being worn;

FIG. **2** is a front view of the invention shown in FIG. **1**;

FIGS. **2**A and **2**B are enlarged portions of the invention shown in FIG. **2**;

FIG. **3** is a rear-right perspective view of the invention shown in FIG. **1**;

FIG. **4** is a rear-left perspective view of the invention shown in FIG. **1**;

FIG. **5** is an enlarged rear view of the invention shown in FIG. **1**;

FIG. **6** is an enlarged view of lower pockets of the invention shown in FIG. **1**;

FIG. **7** is an enlarged view of an upper pocket of the invention shown in FIG. **1**;

FIGS. **8**A and **8**B illustrate front and rear views of an alternative embodiment of the invention shown in FIG. **1**;

FIG. **9** illustrates the invention shown in FIG. **8**A with protective sleeves for the plurality of rods;

FIG. **10**A illustrates a perspective view of an end cap of the invention shown in FIG. **1**;

FIG. **10**B illustrates a cross-sectional view taken generally along line **10**B-**10**B in FIG. **10**A; and,

FIG. **11** illustrates a perspective view of a medial holder of the invention shown in FIG. **1**.

DETAILED DESCRIPTION

At the outset, it should be appreciated that like drawing numbers on different drawing views identify identical, or functionally similar, structural elements. It is to be understood that the claims are not limited to the disclosed aspects.

Furthermore, it is understood that this disclosure is not limited to the particular methodology, materials and modifications described and as such may, of course, vary. It is also understood that the terminology used herein is for the purpose of describing particular aspects only, and is not intended to limit the scope of the claims. Those in the art will understand that any suitable material, now known, or hereafter developed, may be used in forming the present invention described herein.

Unless defined otherwise, all technical and scientific terms used herein have the same meaning as commonly understood to one of ordinary skill in the art to which this disclosure pertains. It should be understood that any methods, devices or materials similar or equivalent to those described herein can be used in the practice or testing of the example embodiments.

Those in the art will understand that any suitable material, now known or hereafter developed, may be used in forming the present invention described herein.

It should be noted that the terms "including", "includes", "having", "has", "contains", and/or "containing", should be interpreted as being substantially synonymous with the terms "comprising" and/or "comprises".

It should be appreciated that the term "substantially" is synonymous with terms such as "nearly," "very nearly," "about," "approximately," "around," "bordering on," "close to," "essentially," "in the neighborhood of," "in the vicinity of," etc., and such terms may be used interchangeably as appearing in the specification and claims. It should be appreciated that the term "proximate" is synonymous with terms such as "nearby," "close," "adjacent," "neighboring," "immediate," "adjoining," etc., and such terms may be used interchangeably as appearing in the specification and claims. The term "approximately" is intended to mean values within ten percent of the specified value.

The word "example" or "exemplary" is used herein to mean "serving as an example, instance, or illustration." Any implementation described herein as "exemplary" is not necessarily to be construed as preferred or advantageous over other implementations.

If the specification states a component or feature "may," "can," "could," "should," "would," "preferably," "possibly," "typically," "optionally," "for example," "often," or "might" (or other such language) be included or have a characteristic, that a specific component or feature is not required to be included or to have the characteristic. Such a component or feature may be optionally included in some embodiments, or it may be excluded.

It should be understood that use of "or" in the present application is with respect to a "non-exclusive" arrangement, unless stated otherwise. For example, when saying that "item x is A or B," it is understood that this can mean one of the following: (1) item x is only one or the other of A and B; (2) item x is both A and B. Alternately stated, the word "or" is not used to define an "exclusive or" arrangement. For example, an "exclusive or" arrangement for the statement "item x is A or B" would require that x can be only one of A and B. Furthermore, as used herein, "and/or" is intended to mean a grammatical conjunction used to indicate that one or more of the elements or conditions recited may be included or occur. For example, a device comprising a first element, a second element and/or a third element, is intended to be construed as any one of the following structural arrangements: a device comprising a first element; a device comprising a second element; a device comprising a third element; a device comprising a first element and a second element; a device comprising a first element and a third element; a device comprising a first element, a second element and a third element; or, a device comprising a second element and a third element.

Moreover, as used herein, the phrases "comprises at least one of" and "comprising at least one of" in combination with a system or element is intended to mean that the system or element includes one or more of the elements listed after the phrase. For example, a device comprising at least one of: a first element; a second element; and, a third element, is intended to be construed as any one of the following structural arrangements: a device comprising a first element; a device comprising a second element; a device comprising a third element; a device comprising a first element and a second element; a device comprising a first element and a third element; a device comprising a first element, a second element and a third element; or, a device comprising a

second element and a third element. A similar interpretation is intended when the phrase "used in at least one of:" is used herein. Furthermore, as used herein, "and/or" is intended to mean a grammatical conjunction used to indicate that one or more of the elements or conditions recited may be included or occur. For example, a device comprising a first element, a second element and/or a third element, is intended to be construed as any one of the following structural arrangements: a device comprising a first element; a device comprising a second element; a device comprising a third element; a device comprising a first element and a second element; a device comprising a first element and a third element; a device comprising a first element, a second element and a third element; or, a device comprising a second element and a third element. A similar interpretation is intended when the phrase "used in at least one of:" or "one of:" is used herein.

Furthermore, as used herein, "and/or" is intended to mean a grammatical conjunction used to indicate that one or more of the elements or conditions recited may be included or occur. For example, a device comprising a first element, a second element and/or a third element, is intended to be construed as any one of the following structural arrangements: a device comprising a first element; a device comprising a second element; a device comprising a third element; a device comprising a first element and a second element; a device comprising a first element and a third element; a device comprising a first element, a second element and a third element; or, a device comprising a second element and a third element.

The terms "distal" or "distally" are intended to be exemplary directional terms and should be interpreted to mean that a first component is arranged away from a second component. Likewise, the terms "proximal" or "proximally" are intended to be exemplary directional terms and should be interpreted to mean that a first component is arranged close to a second component.

Adverting now to the figures, the following description should be taken in view of FIGS. **1** and **2**, which respectively illustrate a front and rear view of person **10** wearing radiation protective garment with weight transferring apparatus **100** (hereinafter "garment"). Generally, garment **100** includes neck end **102**, waist end **104**, back side **106**, front side **108**, first end **108***a*, and second end **108***b*. Neck/head hole **114** is disposed proximate neck end, waist hole **116** is arranged at waist end, first arm hole **110** is disposed proximate neck end and distally in relation to neck/head hole **114**, and second arm hole **112** is disposed proximate neck end, distally in relation to neck/head hole **114**, and opposite first arm hole **110**. As shown, person **100** has neck **20** arranged within neck/head hole, arm **14** through first arm hole **110**, arm **16** through second arm hole **112**, shoulder **22** arranged at least partially within first arm hole **110**, shoulder **24** arranged at least partially within second arm hole **112**, and waist **18** (shown in FIG. **3**) through waist hole **116**. As such, garment **100** substantially covers the entirety of a torso of person **100** (i.e., the torso is under garment **100**).

Garment **100** includes a weight transferring apparatus comprising first upper pocket **118**, second upper pocket **120**, first lower pocket **122**, second lower pocket **124**, first plurality of flexible rods **130**, and second plurality of flexible rods **132**. First upper pocket **118** is disposed above shoulder **22**, proximate back side **106** and neck end **102**. Second upper pocket **120** is disposed above shoulder **24**, proximate back side **106** and neck end **102**, and oppositely arranged in relation to first upper pocket **118**. First lower pocket **122** is disposed on back side **106** proximate waist end **104** and arm **14**, and second lower pocket **124** is disposed on back side **106** proximate waist end **104** and arm **16**. In a preferred embodiment, first lower pocket **122** is a mirror image of second lower pocket **124** taken generally along center line CL of garment **100**. To apply a weight transferring effect, first plurality of flexible rods **130** are contained within first upper pocket **118** and first lower pocket **122**, and second plurality of flexible rods **132** are contained within second upper pocket **120** and second lower pocket **124**.

In a preferred embodiment, first plurality of flexible rods **130** comprises first flexible rod **134**, second flexible rod **136**, third flexible rod **138**, and fourth flexible rod **140**. First flexible rod **134** includes first end **134***a* and second end **134***b*. Second flexible rod **136** includes first end **136***a* and second end **136***b*. Third flexible rod **138** includes first end **138***a* and second end **138***b*. Fourth flexible rod **140** includes first end **140***a* and second end **140***b*. In a preferred embodiment, second plurality of flexible rods **132** comprises fifth flexible rod **142**, sixth flexible rod **144**, seventh flexible rod **146**, and eighth flexible rod **148**. Fifth flexible rod **142** includes first end **142***a* and second end **142***b*. Sixth flexible rod **144** includes first end **144***a* and second end **144***b*. Seventh flexible rod **146** includes first end **146***a* and second end **146***b*. Eighth flexible rod **148** includes first end **148***a* and second end **148***b*.

As illustrated in FIG. **1**, first ends **134***a*-**140***a* of flexible rods **134-140** are arranged to be inserted within first lower pocket **122** and first ends **142***a*-**148***a* of flexible rods **142-148** are arranged to be inserted within second lower pocket **124**. As illustrated in FIG. **2**, specifically in FIGS. **2**A and **2**B, second ends **134***b*-**140***b* of flexible rods **134-140** are arranged to be inserted within first upper pocket **118** and second ends **142***b*-**148***b* of flexible rods **142-148** are arranged to be inserted within second upper pocket **120**.

As generally shown in FIG. **3**, first plurality of flexible rods **130**, when each of the respective ends are inserted and substantially supported by first upper pocket **118** and first lower pocket **122**, flex point FP**1** is created on each of first plurality of flexible rods **130**, thereby imparting force at force point F**1** on first upper pocket **118** from the second ends of first plurality of flexible rods **130**. This force, from bending first plurality of flexible rods **130**, lifts a portion of garment **100** between arm hole **110** and neck hole **114** creating space S**1**.

As generally shown in FIG. **4**, second plurality of flexible rods **132**, when each of the respective ends are inserted and substantially supported by second upper pocket **120** and first lower pocket **124**, flex point FP**2** is created on each of second plurality of flexible rods **132**, thereby imparting force at force point F**2** on second upper pocket **120** from the second ends of second plurality of flexible rods **132**. This force, from bending second plurality of flexible rods **132**, lifts a portion of garment **100** between arm hole **112** and neck hole **114** creating space S**2**.

The illustrations in FIGS. **4** and **5**, generally illustrate how pluralities of rods **130** and **132** remove weight from the shoulders **22** and **24** of person **10** wearing garment **100** and shift that weight, via flexible rods **134-148**, towards waist **18**, generally illustrated by garment **100** being lifted off of shoulders **22** and **24** of person **10** and spaces S**1** and S**2** being created. This weight-transferring or weight-shifting action of garment **100** is afforded by each of flexible rods **134-148** having a substantially longitudinal "resting" position, i.e., straight up and down. When force is imparted on flexible rods **134-148**, i.e., bending and creating flex points FP**1** and FP**2** (See FIGS. **3** and **4**), e.g., when flexible rods **134-148** are inserted into pockets **118-124**, flexible rods **134-148** are

arranged to resist the bending, thereby pushing garment **100** up and off of shoulders **22** and **24** of person **100**, creating spaces S1 and S2 between shoulders **22** and **24** and garment **100** (See FIGS. **3** and **4**).

In a preferred embodiment, each of rods **134-148** are comprised of a fiberglass, or alternatively, a semi-flexible polymer, semi-flexible plastic, semi-flexible plastic/polymer combination, carbon fiber, metals, metal/plastic combinations, etc. It should be appreciated however, that those in the art will understand that any suitable material, now known or hereafter developed, may be used in forming flexible rods **134-148**.

FIG. **6** generally illustrates an enlarged view of a lower pocket assembly of garment **100**. In some embodiments, garment **100** includes lower pocket assembly **150**. Lower pocket assembly **150** comprises at least one of first lower pocket **122**, second lower pocket **124**, third lower pocket **126**, and lower section **152**. First lower pocket **122** includes closed end **122***a*, open end **122***b*, first closed side end **122***c*, and second closed side end **122***d*, thereby forming an internal compartment having an opening thereto. Second lower pocket **124** includes closed end **124***a*, open end **124***b*, first closed side end **124***c*, and second closed side end **124***d*, thereby forming an internal compartment having an opening thereto. Third lower pocket **126** is formed by closed end **126***a*, open end **126***b*, second closed side end **122***d*, and second closed side end **124***d*, thereby forming an internal compartment having an opening thereto. It should be noted that closed ends **122***a*, **124***a*, and **126***a*, first closed side ends **122***c* and **124***c*, and second closed side ends **122***d* and **124***d*, may be stitched seams from lower pocket assembly **150** onto back side **106** of garment **100** (See FIG. **1**). Alternatively, lower pocket assembly **150** may be fixedly secured to back side **106** of garment **100** in a variety of ways, e.g., hot meld, and the like, so long as lower pocket assembly **150** is fixedly secured to garment **100**.

FIG. **7** generally illustrates an enlarged view of an upper pocket assembly of garment **100**, specifically, first upper pocket **118**. It should be noted that the following description also applies to second upper pocket **120** (See FIG. **1**). In some arrangements, first upper pocket **118** includes closed end **118***a*, open end **118***b*, first closed side end **118***c*, and second closed side end **118***d*, thereby forming internal compartment **118***e* having an opening thereto. It should be noted that closed end **118***a* and closed side ends **118***c* and **118***d*, may be stitched seams from first upper pocket **118** onto back side **106** of garment **100**. Alternatively, first upper pocket **118** may be fixedly secured to back side **106** of garment **100** in a variety of ways, e.g., hot meld, and the like, so long as first upper pocket **118** is fixedly secured to garment **100**.

Adverting now to FIGS. **8**A and **8**B, which generally illustrate an alternative embodiment of garment **100**, which includes support belt **160**. In this alternative arrangement, lower pocket assembly **150**, preferably lower section **152** thereof, has support belt **160** attached thereto and extending therefrom. Support belt **160** is arranged to wrap around the user, proximate waist end **104**, such that support belt **160** is generally arranged on the user's lumbar back area. Support belt **160** may be comprised of first section **160***a* and second section **160***b*, which meet on front side **108**, where fastener **162** may removably connect sections **160***a* and **160***b*. It should be noted that fastener **162** may not be necessary depending on the particular fastening configuration employed by sections **160***a* and **160***b* of support belt **160**. In a non-limiting example, sections **160***a* and **160***b* may include hook and loop fasteners arranged thereon, allowing the respective sections to be removably connected at a desired tightness while also eliminating the need for fastener **162**. As such, a hook and loop connection is only an exemplary illustration of one of many possible connection elements that may be employed to avoid the addition of fastener **162**. Notwithstanding, fastener **162** could comprise a pair of mating buckles arranged at respective ends of sections **160***a* and **160***b*, which mating buckles allow for length adjustments of the respective sections to provide a desired tightness of support belt **160** once sections **160***a* and **160***b* are removably mated.

By including support belt **160** with lower pocket assembly **150**, the weight transfer imparted by plurality of flexible rods **130** and **132** is further distributed to the lumbar section of the user's back, while support belt **160** also imparts additional support to the lumber section of the user's back. This combination further reduces the fatigue a user can experience, explained supra, from the weight of garment **100**.

It should be noted that support belt **160** could be directly secured to at least a portion of one or more of back side **106** or front side **108**, where pockets **122** and **124** may be fixedly secured on top of support belt **160**, i.e., support belt **160** is sandwiched between a side of garment **100** and lower pocket assembly **150**.

As shown in FIG. **9**, in another possible arrangement of garment **100**, plurality of flexible rods **130** and **132** may be encased within a sleeve, individually, or collectively as a respective set, i.e., plurality of flexible rods **130** is encased within a first sleeve and plurality of flexible rods **132** is encased within a second sleeve. Sleeves **166** and **168** may be arranged to have plurality of flexible rods **130** arranged therein, where sleeve may have a closeable and known-in-the-art configuration to allow a various quantity of rods to be inserted therein, e.g., zipper, snaps, etc. Sleeves **166** and **168** are additional safety features for plurality of flexible rods **130** and **132**, meaning that if one or more of the flexible rods snap, the respective pieces, halves, etc., are contained within the sleeve. This limits the potential for a shrapnel-like dispersion should one of the rods snap under force and avoid debris from being launched therefrom, protecting not only the user, but others who may be in proximity of the user.

The following description should be taken in view of all of the aforementioned figures and FIGS. **10**A-**10**B, and **11**. FIGS. **10**A and **10**B illustrate a perspective and cross-sectional view of an end cap or end holder **170**. End holder **170** generally includes body **172** having plurality of rod housings **174** arranged therein, e.g., compartments **174***a* through **174***d*. Preferably, each of plurality of rod housings **174** are a partial through-bore, having an open end and a closed end. The plurality of rod housings **174** are arranged to accept a respective end of each of rod of one of the plurality of flexible rods **130** and **132**, e.g., compartment **174***a* may accept first end **134***a* or second end **134***b* of first flexible rod **134**, compartment **174***b* may accept first end **136***a* or second end **136***b* of second flexible rod **136**, compartment **174***c* may accept first end **138***a* or second end **138***b* of third flexible rod **138**, and compartment **174***d* may accept first end **140***a* or second end **140***b* of fourth flexible rod **140**. Therefore, in one possible configuration, there could be a pair of end holders for one plurality of flexible rods, where the end holders are arranged to be inserted within one or more of pockets **118**, **120**, **122**, or **124**, having the respective ends of the rods therein. This allows one plurality of flexible rods to be removed from a respective pair of upper and lower pockets as a set, thusly allowing different sets of rods, which may have greater or less weight

reducing force, such that a single garment vest can be utilized by multiple users have different weight transferring needs. Moreover, the ends of the rods, which could be rough from cutting, are safely secured and surrounding within their respective compartments, further reducing potential injury. As such, compartments **174***a* through **174***d* may include gripping components therein, e.g., a taper which reduces in diameter in a direction away from the respective opening, gripping elements or tacky surface materials making the force to insert and/or remove greater, etc. It is also contemplated that the ends of each flexible rod may have a connector attached thereto and the compartments may have a respective mating connector arranged therein, allowing a mating interaction between the end of the flexible rod and the compartment of the end holder. It should be appreciated that the number of compartments within body **172** of end holder **170** is in a 1:1 ratio with the number of flexible rods for the respective plurality of flexible rods.

In another possible configuration, medial holder **180** may be frictionally and removably secured to one or more of plurality of flexible rods **130** and **132**. Medial holder **180** includes body **182** having plurality of frictional clamps **184** comprised of clamps **184***a* through **184***d*, which have a C-shaped configuration. Each of plurality of frictional clamps **184** are arranged to frictionally "grab" and hold an outer surface of a flexible rod therein, thus keeping a portion of flexible rods, preferably other than the end thereof, e.g., a substantially middle portion, contained and in connection with the entire plurality of rods. Like end holder **170**, It should be appreciated that the number of frictional clamps extending from within body **182** of medial holder **180** is in a 1:1 ratio with the number of flexible rods for the respective plurality of flexible rods.

EXAMPLES

It should be noted that the following description is exemplary and not intended to be limiting on the scope of the appending claims. Each of the flexible rods, discussed supra, may be approximately 0.16 inches in diameter and may have an approximate total length of 1.9 feet. With those exemplary dimensions, having a preferable total of eight (8) flexible rods, there is a weight reduction of at least 35% on a user's upper body, specifically the upper back, shoulders, and neck, with a sized SMALL vest, e.g., a vest length of approximately 22 inches measured from the highest point of the shoulder proximate the neck to proximate the waist and a frontal width of approximately 19 inches which is half of the user's chest circumference. As such, one having skill in the art can appreciate that the diameter and length of each flexible rod allows for variation of the total number of flexible rods. Additionally, length additions to each of flexible rods may be necessary to accommodate taller users who necessarily will have great vest length measurements to ensure the protective garment covers vital areas. Further, users having greater frontal widths, waist widths (measured similarly to frontal width), and/or hip widths (measured similarly to frontal width), may require additional rods to accommodate wider vest measurements, e.g., ten (10) total rods. Thus, one having skill in the art will appreciate that variations in one or more of a total number of flexible rods, an individual rod diameter, or an individual rod length, are contemplated within the scope of the appending claims.

It can be said that the distance between a pair of pockets, e.g., an upper pocket arranged on the shoulder section and a lower pocket, where both of the pockets are on the same side of the garment, have a length therebetween which is less than the length of a flexible rod inserted therein.

As such, the shown and described embodiments are merely exemplary and various alternatives, combinations, omissions, of specific components, or foreseeable alternative components, understood by one having ordinary skill in the art, described in the present disclosure or within the field of the present disclosure, are intended to fall within the scope of the appending claims.

It will be appreciated that various aspects of the disclosure above and other features and functions, or alternatives thereof, may be desirably combined into many other different systems or applications. Various presently unforeseen or unanticipated alternatives, modifications, variations, or improvements therein may be subsequently made by those skilled in the art which are also intended to be encompassed by the following claims.

REFERENCE NUMBERS

10 Person
12 Torso
14 Arm
16 Arm
18 Waist
20 Neck
22 Shoulder
24 Shoulder
100 Radiation protective garment with weight transferring apparatus
102 Neck end
104 Torso end
106 Back side/surface
108 Front side/surface
108*a* First end
108*b* Second end
110 First arm hole
112 Second arm hole
114 Neck/head hole
116 Waist hole
118 First upper pocket
118*a* Closed end
118*b* Open end
118*c* First closed side end
118*d* Second closed side end
118*e* Cavity
120 Second upper pocket
122 First lower pocket
122*a* Closed end
122*b* Open end
122*c* First closed side end
122*d* Second closed side end
124 Second lower pocket
124*a* Closed end
124*b* Open end
124*c* First closed side end
124*d* Second closed side end
126 Third lower pocket
126*a* Closed end
126*b* Open end
130 First plurality of flexible rods
132 Second plurality of flexible rods
134 First flexible rod
134*a* First end
134*b* Second end
136 Second flexible rod
136*a* First end

136*b* Second end
138 Third flexible rod
138*a* First end
138*b* Second end
140 Fourth flexible rod
140*a* First end
140*b* Second end
142 Fifth flexible rod
142*a* First end
142*b* Second end
144 Sixth flexible rod
144*a* First end
144*b* Second end
146 Seventh flexible rod
146*a* First end
146*b* Second end
148 Eighth flexible rod
148*a* First end
148*b* Second end
150 Lower pocket assembly
152 Lower section
160 Support belt
160*a* Section
160*b* Section
162 Fastener
170 End holder
172 Body
174 Plurality of rod housings
174*a* Compartment
174*b* Compartment
174*c* Compartment
174*c* Compartment
180 Medial holder
182 Body
184 Plurality of frictional clamps
184*a* Clamp
184*b* Clamp
184*c* Clamp
184*d* Clamp
CL Center line
F**1** First force point
F**2** Second force point
FP**1** First flex point
FP**2** Second flex point
5 S**1** First space
S**2** Second space

What is claimed is:

1. A radiation protective garment having a front surface, a back surface, a waist portion and a shoulder portion, said protective garment to be worn by a person having a waist and shoulders, comprising:

a first upper pocket arranged proximate said back surface and a first shoulder of said shoulder portion, said first upper pocket having a closed end facing said front surface;

a second upper pocket arranged proximate said back surface and a second shoulder of said shoulder portion, said second upper pocket having a closed end facing said front surface;

a first lower pocket arranged on said back surface and proximate said waist portion, said first lower pocket having a closed end facing said waist portion;

a second lower pocket arranged on said back surface and proximate said waist portion, said second lower pocket having a closed end facing said waist portion;

a first plurality of flexible rods supported by said first upper pocket and said first lower pocket; and,

a second plurality of flexible rods supported by said second upper pocket and said second lower pocket.

2. The radiation protective garment recited in claim **1** further comprising a third lower pocket arranged between said first and second lower pockets on said back surface.

3. The radiation protective garment recited in claim **1**, wherein said first plurality of flexible rods and said second plurality of flexible rods each comprise four flexible rods.

4. The radiation protective garment recited in claim **1**, wherein each of said flexible rods of said first and second plurality of flexible rods are comprised of fiberglass.

5. The radiation protective garment recited in claim **1**, wherein said first and second lower pockets are arranged proximate a center line of said back surface.

6. The radiation protective garment recited in claim **1**, wherein said first plurality of flexible rods have a first flex point when supported by said first upper pocket and said first lower pocket; and, said second plurality of flexible rods have a second flex point when supported by said second upper pocket and said second lower pocket.

7. The radiation protective garment recited in claim **1**, when worn by the person, wherein said shoulder portion is elevated above said shoulders of said person when said first plurality of flexible rods are supported by said first upper pocket and said first lower pocket; and, said second plurality of flexible rods are supported by said second upper pocket and said second lower pocket.

8. The radiation protective garment recited in claim **1**, wherein each of said first plurality of flexible rods have a first end and a second end, and each of said second plurality of flexible rods have a first end and a second end.

9. The radiation protective garment recited in claim **8**, wherein each end of each flexible rod is covered by a tip sleeve.

10. The radiation protective garment recited in claim **8**, wherein:

said first ends of said first plurality of flexible rods are removably seated within said first upper pocket;

said first ends of said second plurality of flexible rods are removably seated within said second upper pocket;

said second ends of said first plurality of flexible rods are removably seated within said first lower pocket; and,

said second ends of said second plurality of flexible rods are removably seated within said second lower pocket.

11. The radiation protective garment recited in claim **1** further comprising a support belt secured proximate said waist portion on said back surface, said support belt comprising a first section and a second section, said first and second sections adapted to be removably connected.

12. The radiation protective garment recited in claim **11**, wherein said support belt includes a first end on said first section and a second end on said second section, a male buckle affixed to said first end, a female buckle affixed to said second end, said male buckle and said female buckle are operatively arranged to adjust a length of both sections.

13. The radiation protective garment recited in claim **11**, wherein each of said sections of said support belt have a fastener and said fasteners are adapted to removably connect said sections of support belt together.

14. The radiation protective garment recited in claim **1** further comprising:

a first protective sleeve arranged to removably accept and hold said first plurality of flexible rods therein; and,

a second protective sleeve arranged to removably accept and hold said second plurality of flexible rods therein.

15. A garment having a front surface, a back surface, a waist portion and a shoulder portion, said garment to be worn by a person having a waist and shoulders, comprising:

a first upper pocket arranged proximate said back surface and a first shoulder of said shoulder portion, said first upper pocket having a closed end facing said front surface;

a second upper pocket arranged proximate said back surface and a second shoulder of said shoulder portion, said second upper pocket having a closed end facing said front surface;

a first lower pocket arranged on said back surface and proximate said waist portion, said first lower pocket having a closed end facing said waist portion;

a second lower pocket arranged on said back surface and proximate said waist portion, said second lower pocket having a closed end facing said waist portion;

a first at least one flexible rod removably arranged within said first upper pocket and said first lower pocket; and,

a second at least one flexible rod removably arranged within said second upper pocket and said second lower pocket, wherein when said rods are seated within the respective pockets they are flexed and extend away from said back surface.

16. The garment recited in claim 15 further comprising a support belt secured proximate said waist portion on said back surface, said support belt comprising a first section and a second section, said first and second sections adapted to be removably connected.

17. The garment recited in claim 15, wherein:

said first at least one flexible rod comprises a first plurality of flexible rods; and,

said second at least one flexible rod comprises a second plurality of flexible rods.

18. The garment recited in claim 15, wherein:

said first plurality of flexible rods comprises at least four flexible rods; and,

said second plurality of flexible rods comprises at least four flexible rods.

19. A radiation protective garment having a front surface, a back surface, a waist portion and a shoulder portion, the protective garment configured to be worn by a person having a waist and shoulders, comprising:

a first flexible rod and a second flexible rod, each having a length;

a pair of upper abutment structures, each integrated with a respective shoulder of the shoulder portion and each providing an upper abutment surface;

at least one lower abutment structure integrated with the back surface proximate the waist portion and providing at least one lower abutment surface; wherein:

the first flexible rod is constrained between a first of the upper abutment surfaces and the at least one lower abutment surface, and the second flexible rod is constrained between a second of the upper abutment surfaces and the at least one lower abutment surface; and,

the length of each of said first and second flexible rods is greater than a linear distance between its respective upper and lower abutment surfaces, such that each rod is maintained in a flexed state.

* * * * *