US012806637B2

(12) **United States Patent**
Olsowski

(10) **Patent No.: US 12,806,637 B2**
(45) **Date of Patent: Nov. 24, 2026**

(54) **PORTABLE FAN**

(71) Applicant: **Scott Olsowski**, Stuart, FL (US)

(72) Inventor: **Scott Olsowski**, Stuart, FL (US)

(*) Notice: Subject to any disclaimer, the term of this patent is extended or adjusted under 35 U.S.C. 154(b) by 302 days.

(21) Appl. No.: **18/672,163**

(22) Filed: **May 23, 2024**

(65) **Prior Publication Data**

US 2025/0360522 A1 Nov. 27, 2025

(51) **Int. Cl.**
B05B 3/02 (2006.01)
B01F 23/21 (2022.01)
B01F 23/213 (2022.01)

(52) **U.S. Cl.**
CPC ***B05B 3/0204*** (2025.08); ***B01F 23/21312*** (2022.01); ***B01F 23/21321*** (2022.01)

(58) **Field of Classification Search**
CPC .. B01F 23/21; B01F 23/213; B01F 23/21321; B01F 23/21312; B01D 23/21; B01D 23/213; B01D 23/21321
See application file for complete search history.

(56) **References Cited**

U.S. PATENT DOCUMENTS

2,653,803	A	9/1953	Baner	
6,588,372	B1 *	7/2003	Terrell	F24F 5/0035 261/28
7,510,170	B2	3/2009	Huang	
7,677,054	B2	3/2010	Dos Santos	
D680,209	S	4/2013	Yen	
D688,726	S	8/2013	Samuels	
9,091,452	B2	7/2015	Yen	
9,267,698	B2	2/2016	Stearns	
9,765,982	B2	9/2017	Escalettes et al.	
10,576,905	B1	3/2020	MacNeil et al.	
D992,719	S	7/2023	Lin et al.	
11,953,256	B2	4/2024	Barlettano	
2009/0014556	A1	1/2009	Gokal	

(Continued)

FOREIGN PATENT DOCUMENTS

CN	204061228 U	*	12/2014
CN	205747278		11/2016

(Continued)

OTHER PUBLICATIONS

Design U.S. Pat. No. D. 101,4729 ; issued Feb. 13, 2024; Huizhou Dahe Ind Co Ltd.

Primary Examiner — Robert A Hopkins
(74) *Attorney, Agent, or Firm* — Simpson & Simpson, PLLC

(57) **ABSTRACT**

A portable misting fan including a body having interconnected upper and lower sections thereby circumferentially defining a passageway with respective open ends therebetween, said upper section comprising an arcuate internal reservoir therein, said internal reservoir having an inlet and at least one outlet, a fan assembly arranged at least partially within said passageway, a sonic disk in communication with said at least one outlet and positioned in front of said fan assembly, and a mounting arm pivotably connected to said body about an axis perpendicularly arranged with respect to said open ends of said passageway, where the sonic disk assembly is designed to selectably atomize and disperse water—the water communicated from the internal reservoir—from the sonic disk assembly in a continuous or intermittent manner.

14 Claims, 9 Drawing Sheets

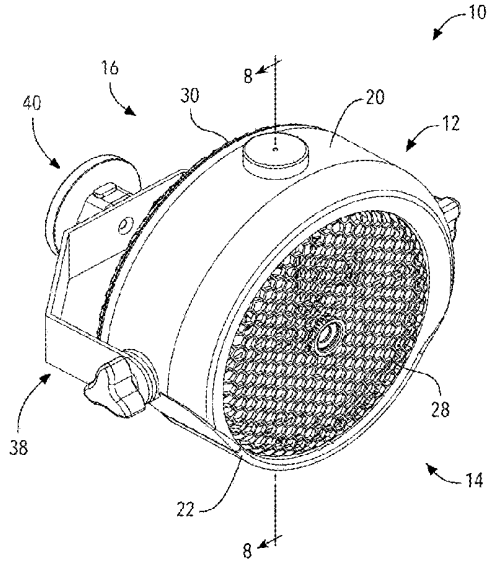

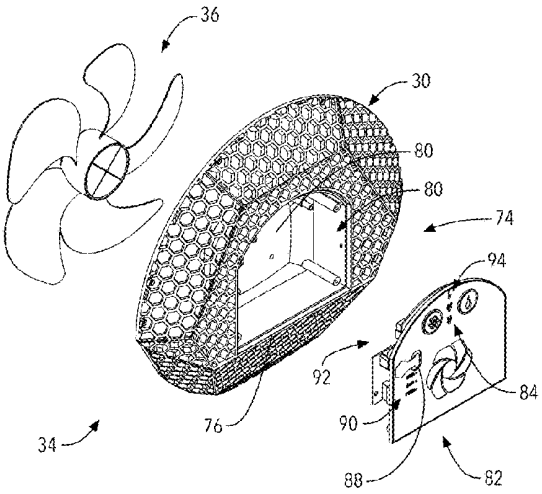

(56) **References Cited**

U.S. PATENT DOCUMENTS

2015/0054181	A1	2/2015	Martin et al.
2021/0293425	A1	9/2021	Ma
2022/0080437	A1	3/2022	Zhong

FOREIGN PATENT DOCUMENTS

CN	206668591	11/2017
CN	210290192	4/2020
CN	212006065	11/2020
CN	218894802	4/2023
EP	3948097	2/2022

* cited by examiner

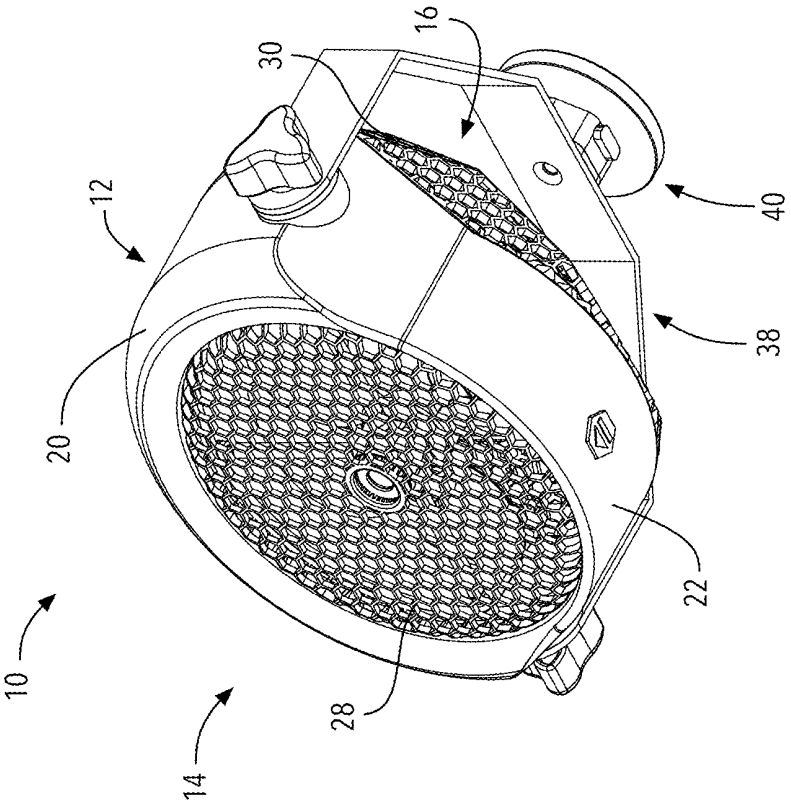

FIG. 1B

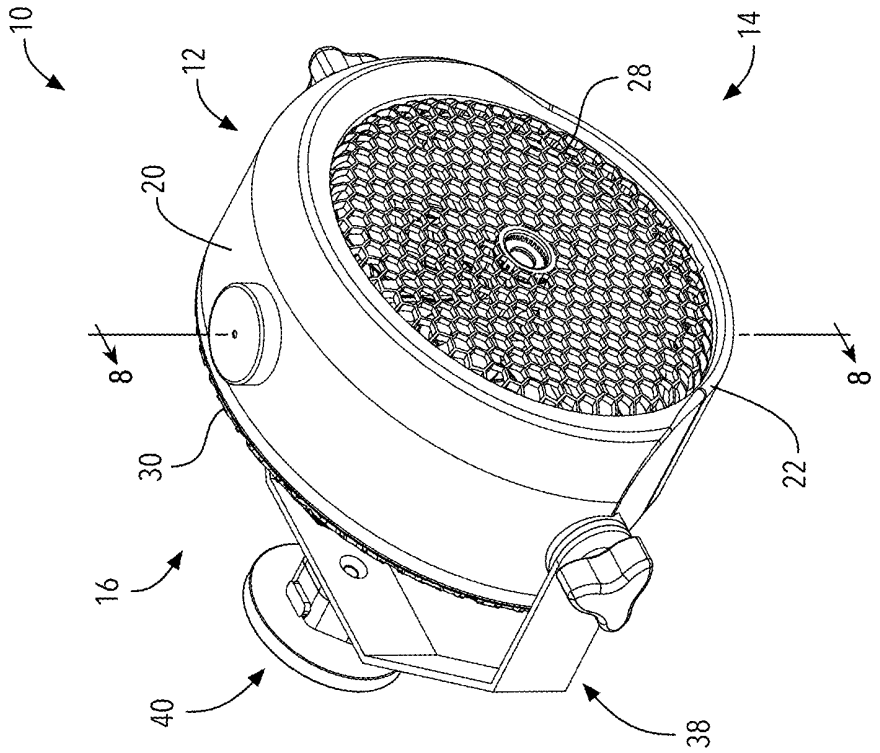

FIG. 1A

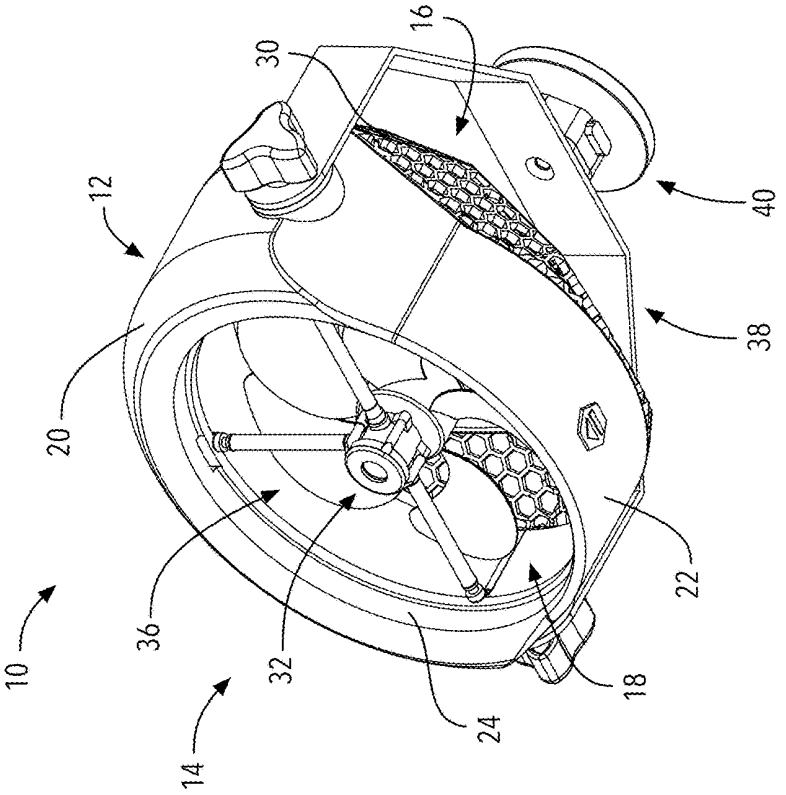
16
30
12
40
20
38
22
10
36
32
18
14
24

FIG. 2B

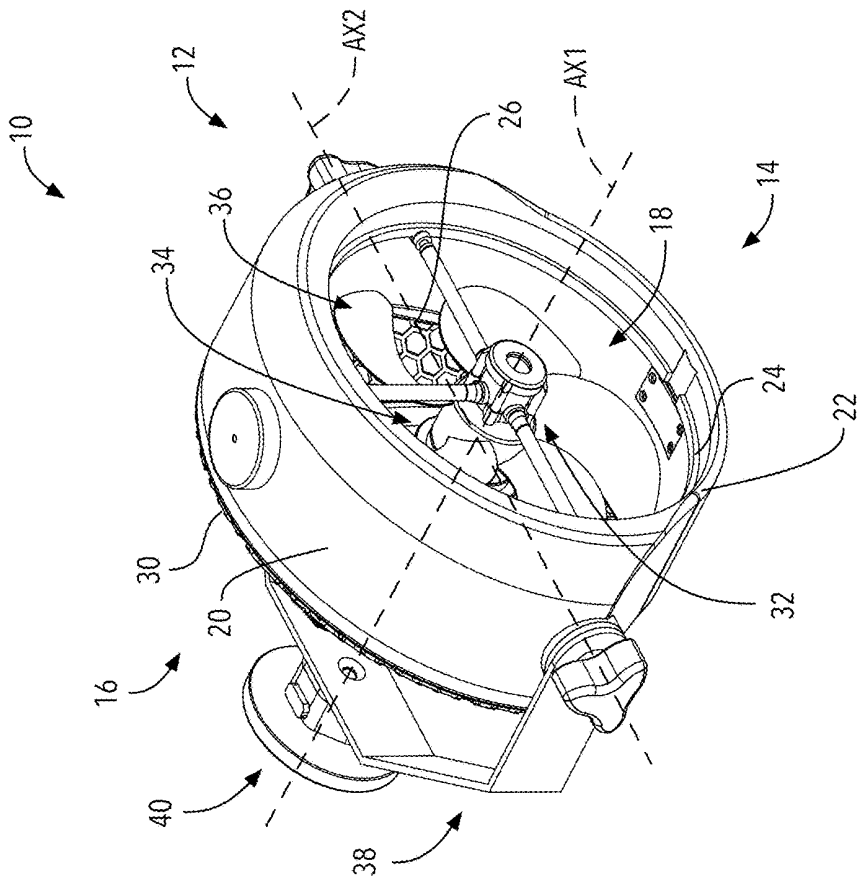
10
12
AX2
26
AX1
14
36
18
34
24
22
30
20
32
16
40
38

FIG. 2A

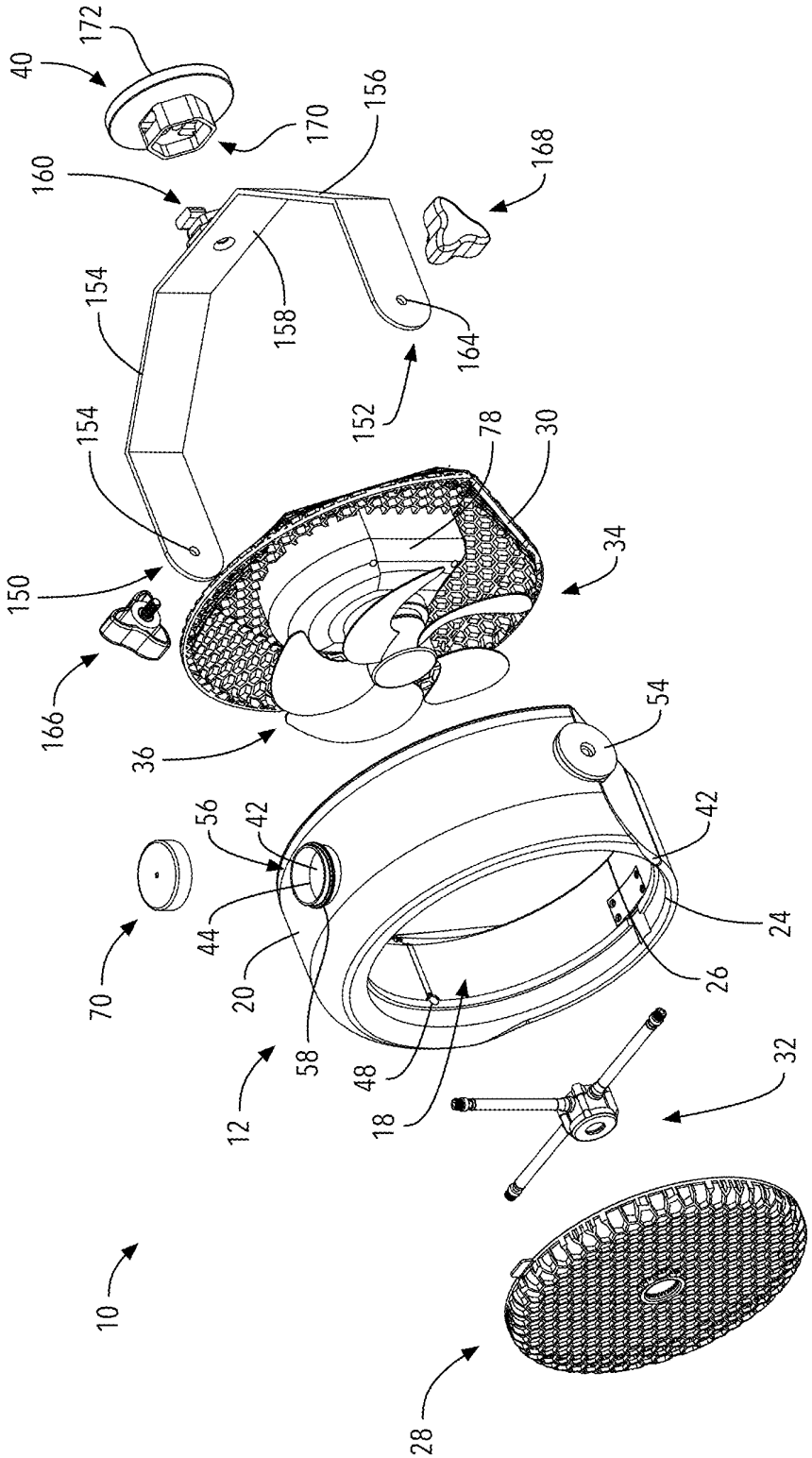
40
172
170
156
160
168
154
158
164
152
154
78
30
34
150
166
36
54
56
42
42
44
24
70
20
26
58
48
32
12
18
10
28

FIG. 3

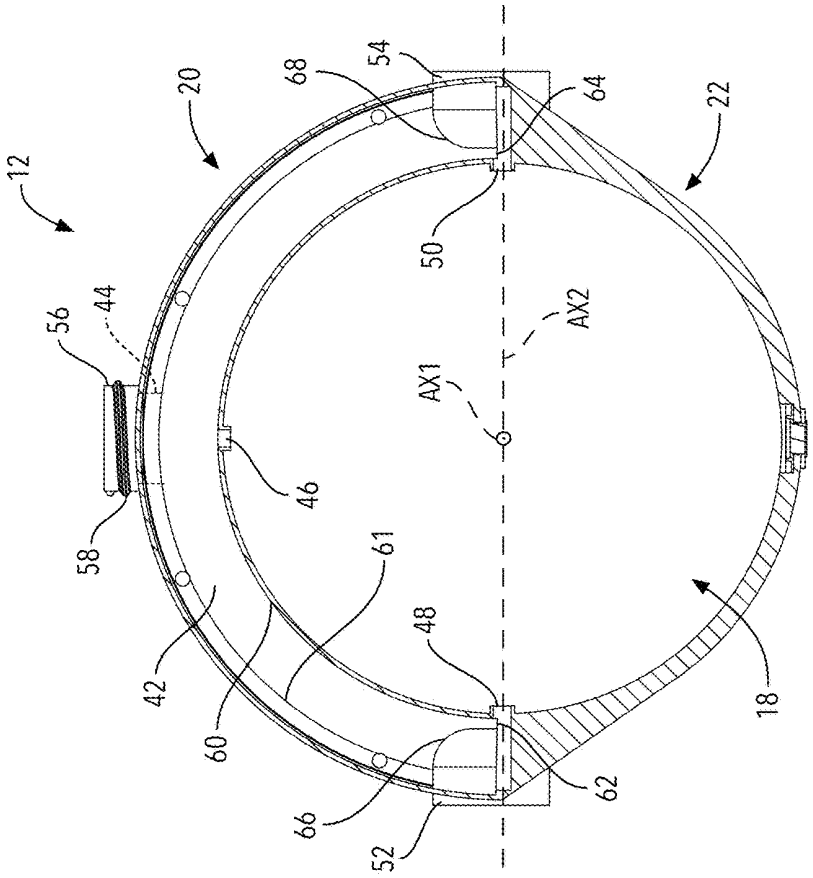
12
20
68
54
64
22
50
AX2
AX1
56
44
46
58
61
42
60
48
18
66
62
52

FIG. 4B

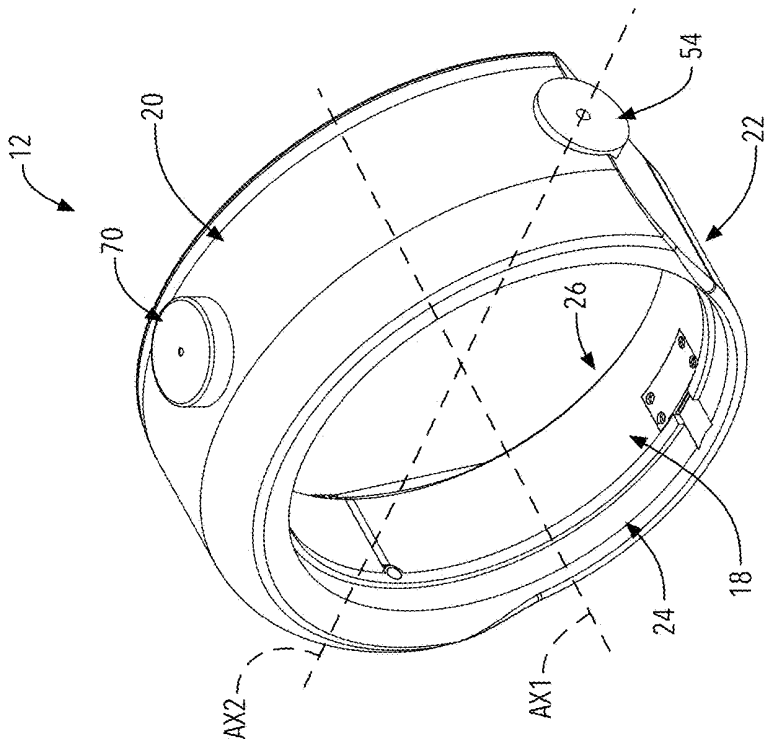
12
20
54
22
70
26
18
24
AX2
AX1

FIG. 4A

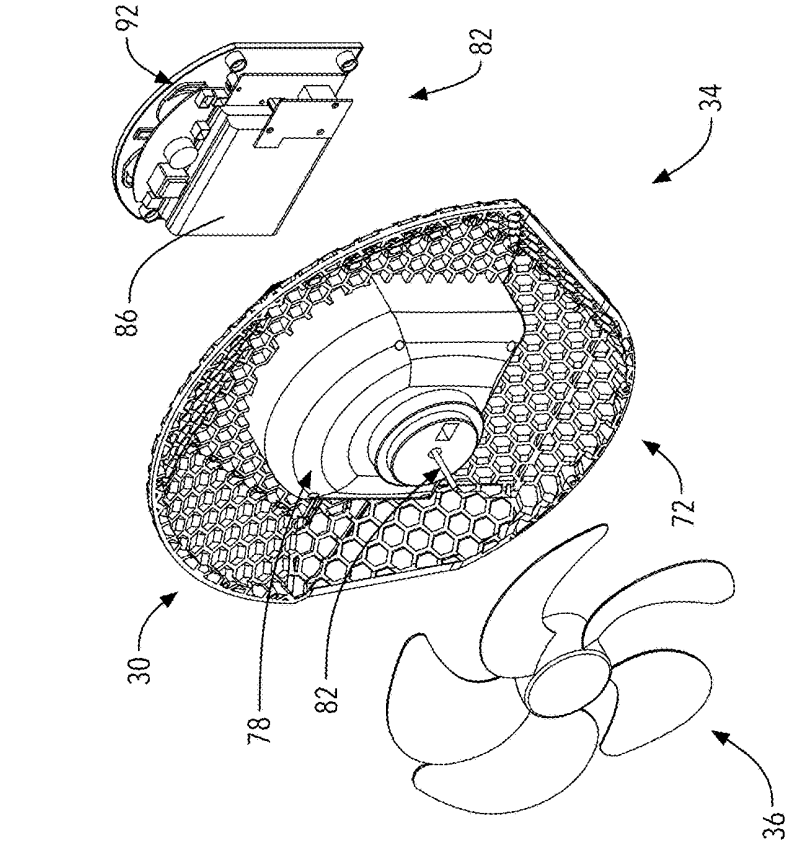

FIG. 5B

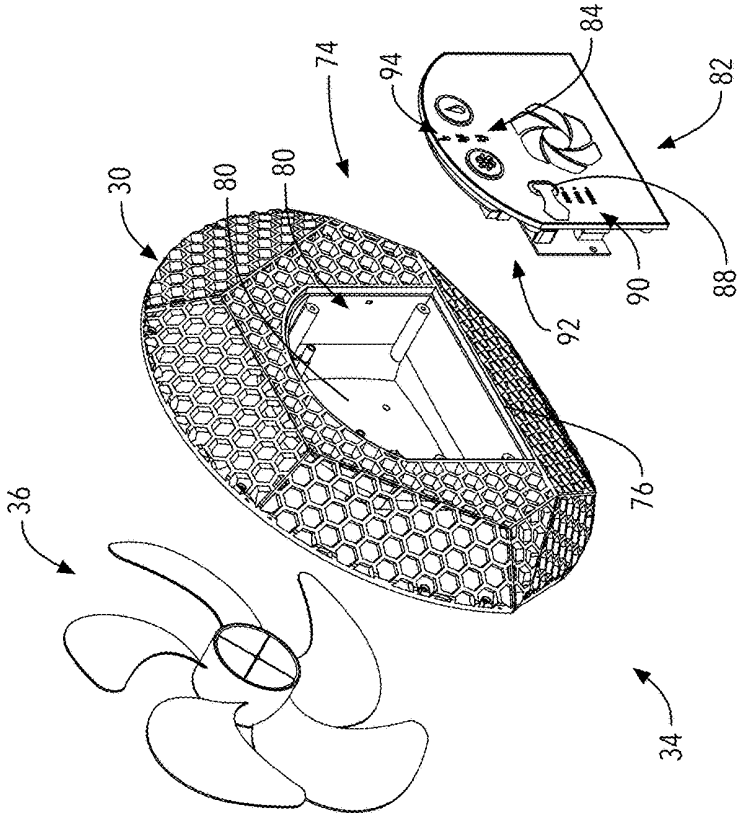

FIG. 5A

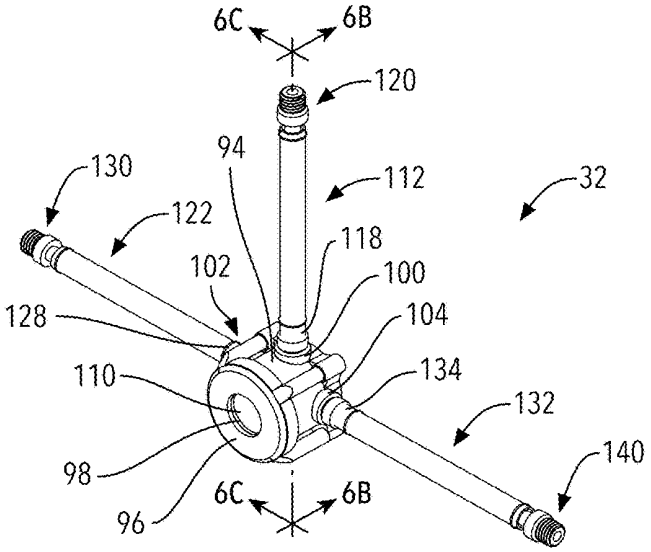

FIG. 6A

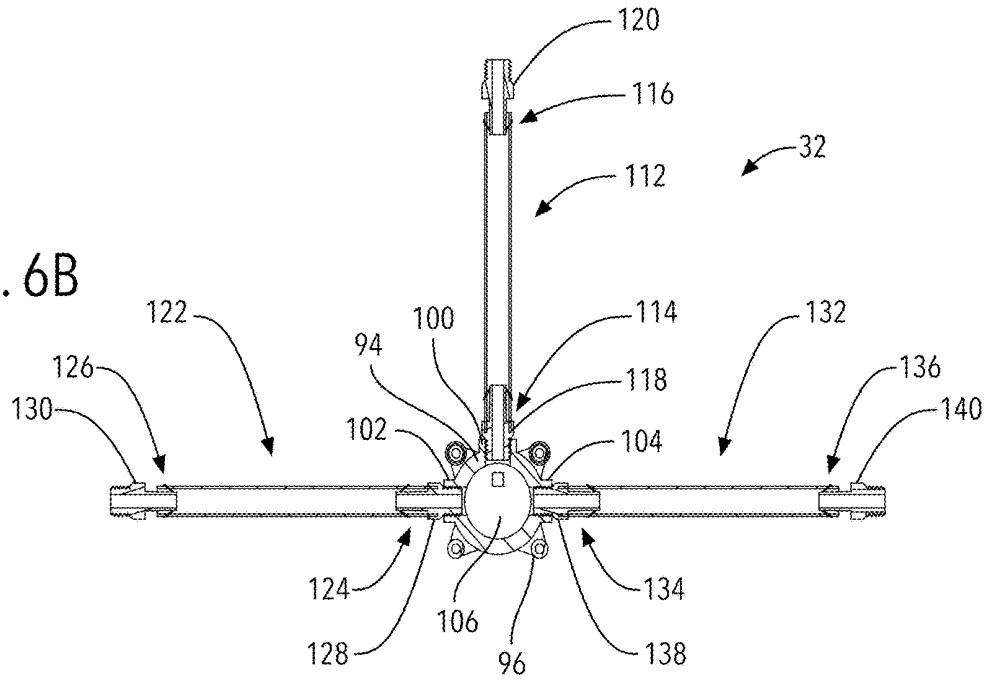

FIG. 6B

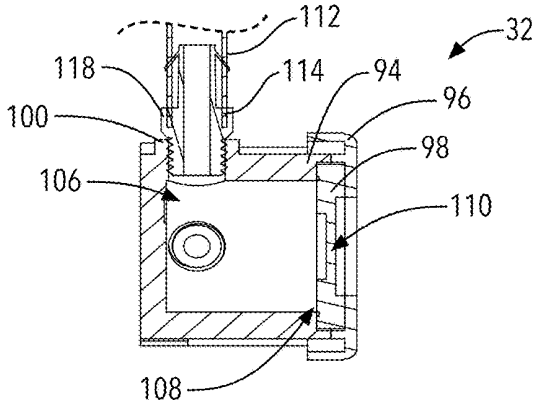

FIG. 6C

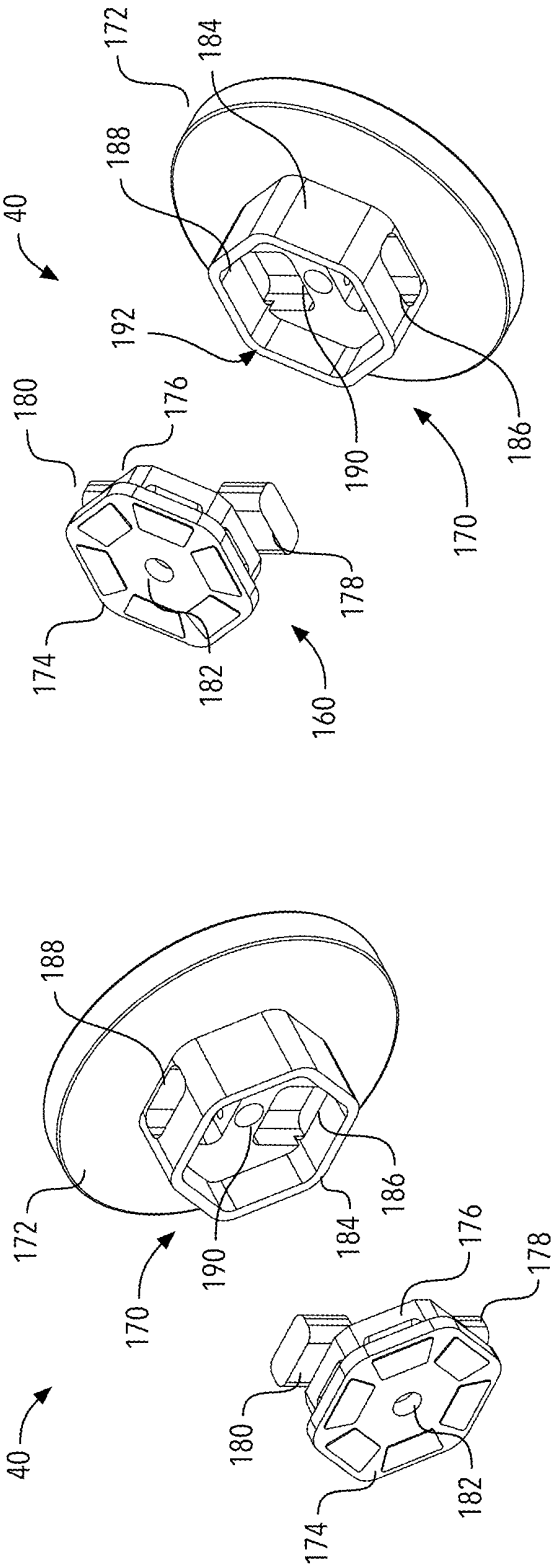

FIG. 7B

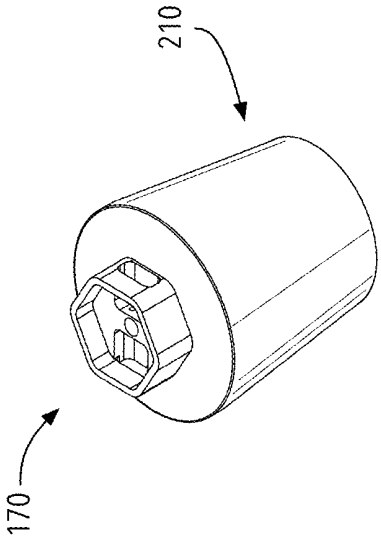

FIG. 7C

FIG. 7A

FIG. 8

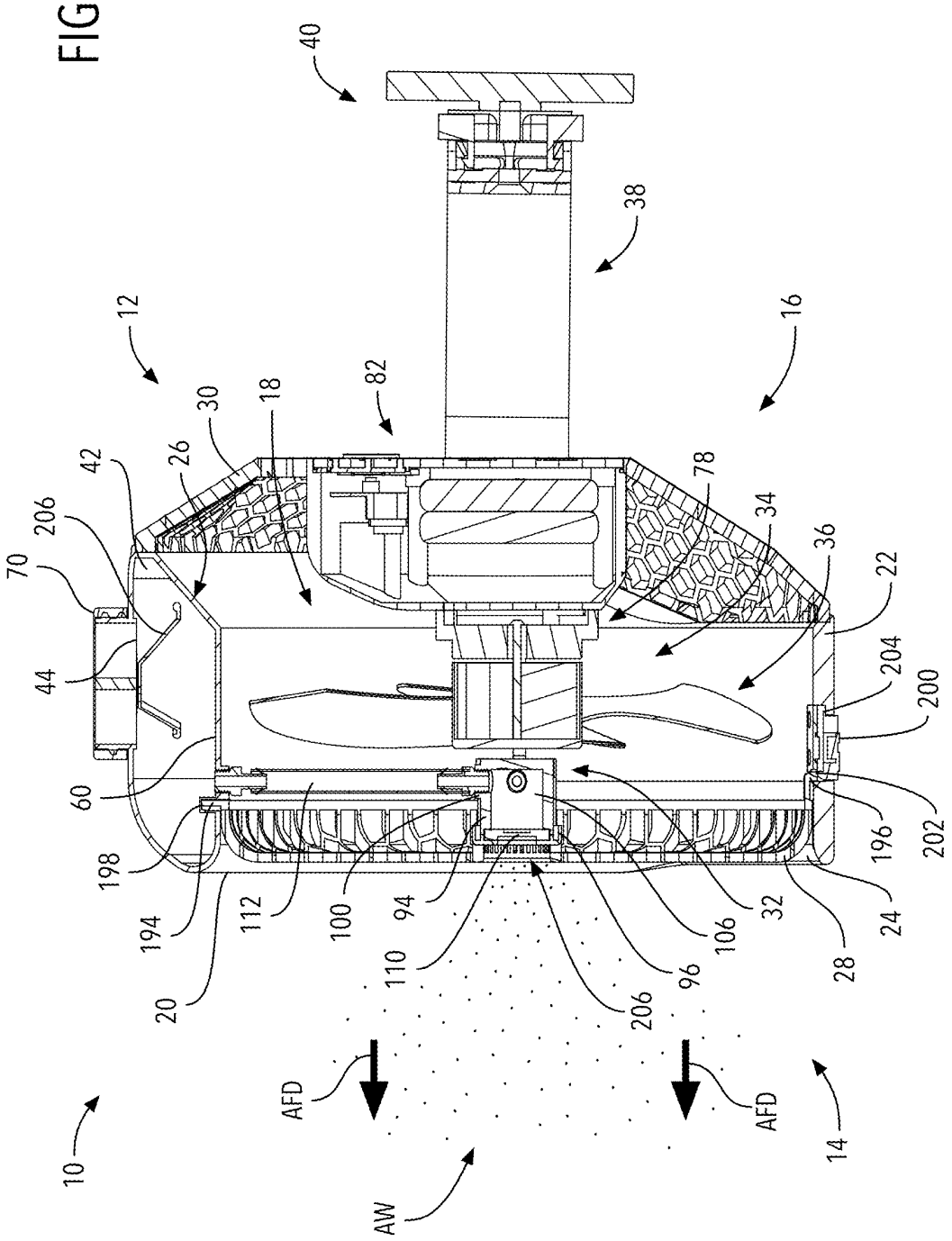
40
38
12
16
82
30
18
26
42
206
70
78
34
36
22
44
204
200
60
198
194
112
100
94
110
20
206
96
106
32
28
24
196
202
AFD
AFD
AW
10
14

FIG. 9

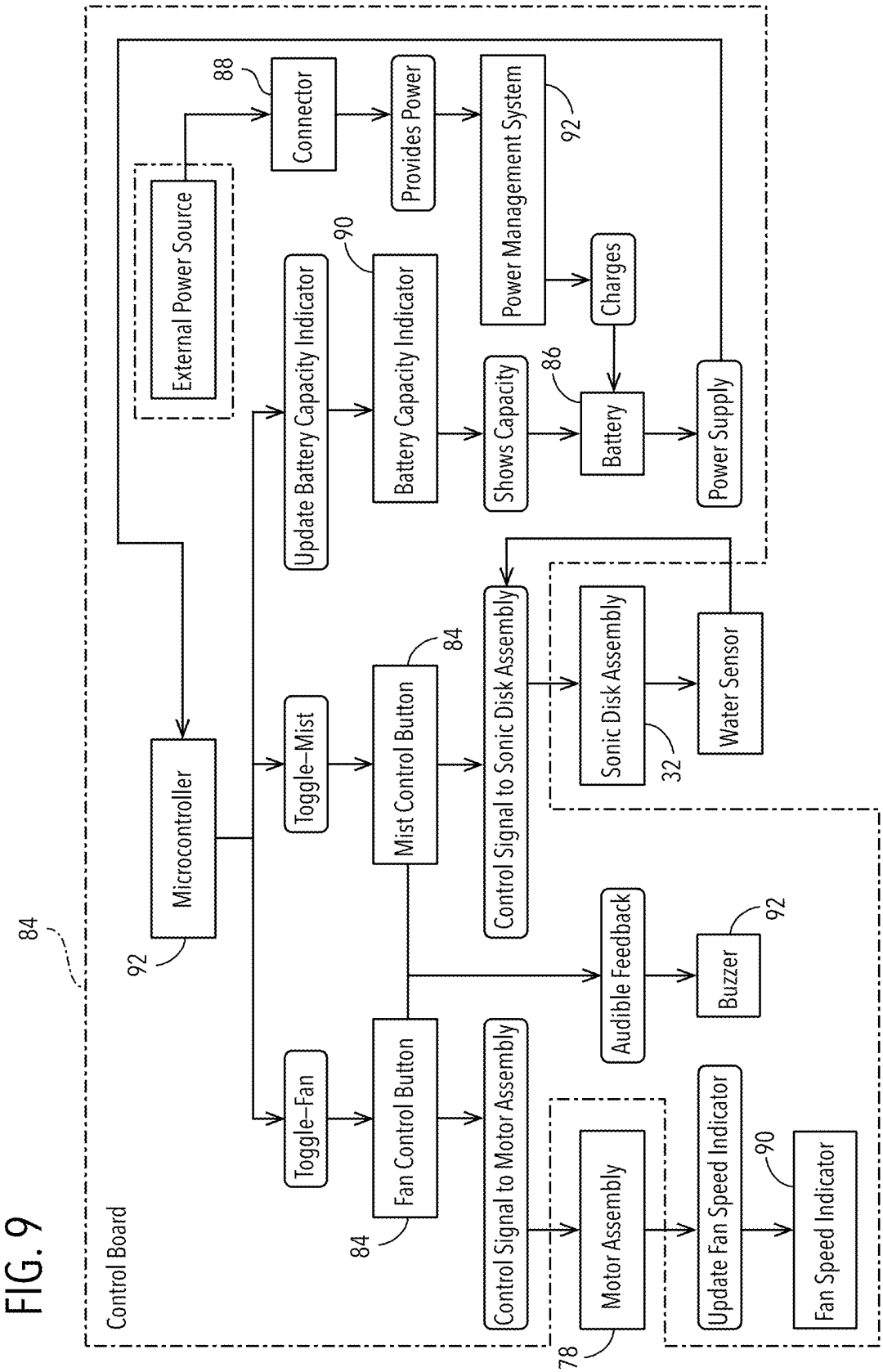
84
Control Board
External Power Source
88
Connector
Provides Power
Power Management System
92
Charges
90
Update Battery Capacity Indicator
Battery Capacity Indicator
Shows Capacity
86
Battery
Power Supply
Microcontroller
92
Toggle–Mist
Mist Control Button
84
Control Signal to Sonic Disk Assembly
Sonic Disk Assembly
32
Water Sensor
Toggle–Fan
Fan Control Button
84
Control Signal to Motor Assembly
Audible Feedback
Buzzer
92
Motor Assembly
78
Update Fan Speed Indicator
90
Fan Speed Indicator

PORTABLE FAN

FIELD

The present invention relates to a portable fan, specifically a portable misting fan having an internal and integrated water reservoir.

BACKGROUND

Misting fans are known in the art. Examples include hand-held powered fans, which are also connected to a water reservoir, where the reservoir includes a manual pump allowing water to be sprayed from the reservoir into the wind-path created by the fan, thereby producing a misting effect of the pumped water in the direction of the wind-path.

Other known versions include industrial type fans, which can be commonly seen at sporting events hosted in arid weather conditions. These industrial misting fans are typically large and require a corded power supply. In some configurations, these industrial misting fans are also arranged in fixed positions or alternatively, are arranged on large transportation devices, i.e., a stand having wheels, where the stand needs to be of a sufficient size to accommodate the industrial misting fan and also support a proper-upright position of the fan. The fluid reservoir is also large, or alternatively, may be directly connected to a constant water supply.

Both of these known versions of the misting fan are either too simple and require physical actuation, or are too complex, large, and are tied to an external power supply for continuous use.

Therefore, there is a long-felt need for a portable and powered misting fan, which includes an onboard power supply, e.g., a battery, an interchangeable and portable mounting system, a convenient reservoir integrated into the misting fan, and adjustability of not only the wind-force of the fan, but also adjustability of the misting-rate, i.e., continuous, intermittent, none, and the wind-force, i.e., different speeds.

SUMMARY

According to aspects herein, the present invention generally comprises a portable misting fan including a body having interconnected upper and lower sections thereby circumferentially defining a passageway with respective open ends therebetween, said upper section comprising an arcuate internal reservoir therein, said internal reservoir having an inlet and at least one outlet, a fan assembly arranged at least partially within said passageway, a sonic disk in communication with said at least one outlet and positioned in front of said fan assembly, and a mounting arm pivotably connected to said body about an axis perpendicularly arranged with respect to said open ends of said passageway, where the sonic disk assembly is designed to selectably atomize and disperse water—the water communicated from the internal reservoir—from the sonic disk assembly in one or more of a continuous or intermittent manner.

In some embodiments, the aforementioned portable misting fan further comprises a battery in communication with the fan assembly.

In other configurations, the aforementioned portable misting fan further comprises mounting means removably connected to a distal end of the mounting arm, where the mounting means comprise one or more of a movably connected clamp, a magnet, a movably connected suction cup, or a movably connected cup-holder mount, i.e., a body arranged to be at least partially seated within a cup holder which can removably connect to the mounting arm. In other words, the mounting means may comprise any combination, sub-combination, and/or partial combination, of the components and/or sub-components of the aforementioned.

In a preferable embodiment, the aforementioned portable misting fan further comprises a first, second, and third outlet, which outlets are in communication with the sonic disk.

In some embodiments, the aforementioned portable misting fan further comprises a controller, or microcontroller, in communication with the fan assembly and the sonic disk assembly, the controller adapted to toggle power to the fan assembly and to toggle activation of the sonic disk assembly.

In one possible arrangement, the present invention may comprise a portable misting fan having a body having interconnected upper and lower sections thereby circumferentially defining a passageway with respective open ends therebetween, the upper section comprising an arcuate internal reservoir therein, the internal reservoir having: an inlet; a first outlet; a second outlet; and, a third outlet, a perforated faceplate having a dispensing aperture arranged therein, the faceplate arranged to substantially cover and be removably connected to one of the open ends, a perforated backplate having an aperture therein, the backplate arranged to substantially cover to one of the open ends opposite said perforated faceplate, a fan assembly arranged at least partially within the passageway and connected to the perforated backplate within the aperture of the backplate, a sonic disk assembly in communication with the outlets and positioned in front of the fan assembly proximate the front perforated faceplate, and wherein the sonic disk assembly is adapted to selectably atomize and disperse water, communicated from the internal reservoir, therefrom in one or more of a continuous or intermittent manner through the dispensing aperture of the faceplate.

These and other objects, features, and advantages of the present invention will become readily apparent upon a review of the following detailed description of the invention, in view of the drawings and appended claims.

BRIEF DESCRIPTION

Various embodiments are disclosed, by way of example only, with reference to the accompanying drawings in which corresponding reference symbols indicate corresponding parts, in which:

FIGS. **1**A and **1**B generally show perspective views of the present invention;

FIGS. **2**A and **2**B show perspective views of the invention shown in FIG. **1**A with the front grate removed;

FIG. **3** is an exploded view of the invention shown in FIG. **1**A;

FIG. **4**A is a perspective view of the main body of the invention shown in FIG. **1**A;

FIG. **4**B is a cross-sectional view taken generally along line **4**B-**4**B in FIG. **4**A;

FIGS. **5**A and **5**B are exploded views of the fan assembly of the invention shown in FIG. **1**A;

FIG. **6**A is a perspective view of the sonic disk assembly of the invention shown in FIG. **1**A;

FIG. **6**B is a cross-sectional view taken generally along line **6**B-**6**B in FIG. **6**A;

FIG. **6**C is a cross-sectional view taken generally along line **6**C-**6**C in FIG. **6**A;

FIGS. **7**A and **7**B illustrate exploded views of the mounting assembly of the invention shown in FIG. **1**A;

FIG. **7**C illustrates a cup-holder mount embodiment of the mounting assembly;

FIG. **8** is a cross-sectional view taken generally along line **8**-**8** in FIG. **1**A; and,

FIG. **9** is a high-level schematic of a representative control board and components.

DETAILED DESCRIPTION

At the outset, it should be appreciated that like drawing numbers on different drawing views identify identical, or functionally similar, structural elements. It is to be understood that the claims are not limited to the disclosed aspects.

Furthermore, it is understood that this disclosure is not limited to the particular methodology, materials and modifications described and as such may, of course, vary. It is also understood that the terminology used herein is for the purpose of describing particular aspects only, and is not intended to limit the scope of the claims. Those in the art will understand that any suitable material, now known, or hereafter developed, may be used in forming the present invention described herein.

Unless defined otherwise, all technical and scientific terms used herein have the same meaning as commonly understood to one of ordinary skill in the art to which this disclosure pertains. It should be understood that any methods, devices or materials similar or equivalent to those described herein can be used in the practice or testing of the example embodiments.

It should be noted that the terms "including", "includes", "having", "has", "contains", and/or "containing", should be interpreted as being substantially synonymous with the terms "comprising" and/or "comprises".

It should be appreciated that the term "substantially" is synonymous with terms such as "nearly," "very nearly," "about," "approximately," "around," "bordering on," "close to," "essentially," "in the neighborhood of," "in the vicinity of," etc., and such terms may be used interchangeably as appearing in the specification and claims. It should be appreciated that the term "proximate" is synonymous with terms such as "nearby," "close," "adjacent," "neighboring," "immediate," "adjoining," etc., and such terms may be used interchangeably as appearing in the specification and claims. The term "approximately" is intended to mean values within ten percent of the specified value.

It should be understood that use of "or" in the present application is with respect to a "non-exclusive" arrangement, unless stated otherwise. For example, when saying that "item x is A or B," it is understood that this can mean one of the following: (1) item x is only one or the other of A and B; (2) item x is both A and B. Alternately stated, the word "or" is not used to define an "exclusive or" arrangement. For example, an "exclusive or" arrangement for the statement "item x is A or B" would require that x can be only one of A and B. Furthermore, as used herein, "and/or" is intended to mean a grammatical conjunction used to indicate that one or more of the elements or conditions recited may be included or occur. For example, a device comprising a first element, a second element and/or a third element, is intended to be construed as any one of the following structural arrangements: a device comprising a first element; a device comprising a second element; a device comprising a third element; a device comprising a first element and a second element; a device comprising a first element and a third element; a device comprising a first element, a second element and a third element; or, a device comprising a second element and a third element.

Moreover, as used herein, the phrases "comprises at least one of" and "comprising at least one of" in combination with a system or element is intended to mean that the system or element includes one or more of the elements listed after the phrase. For example, a device comprising at least one of: a first element; a second element; and, a third element, is intended to be construed as any one of the following structural arrangements: a device comprising a first element; a device comprising a second element; a device comprising a third element; a device comprising a first element and a second element; a device comprising a first element and a third element; a device comprising a first element, a second element and a third element; or, a device comprising a second element and a third element. A similar interpretation is intended when the phrase "used in at least one of:" is used herein.

In reference to FIGS. **1**A through **2**B, which collectively show perspective views of the present invention, portable misting fan **10** (hereinafter "fan **10**"). Generally, fan **10** may include body **12** having front end **14** and back end **16**, and with interconnected, i.e., integral, upper section **20** and lower section **22** which circumferentially define passageway **18** extending therethrough. Passageway **18** is bounded by two openings at respective ends, which openings accept perforated grates **28** and **30** therein. First opening **24** of passageway **18** is shown in FIGS. **2**A and **2**B. First axis AX**1** extends longitudinally through a substantially center position of passageway **18** and both of the openings thereof.

As shown in FIGS. **2**A and **2**B, fan assembly **34** is arranged within passageway **18** and is preferably mounted to and extends from grate **30**. Fan assembly **34** includes fan **36** having a plurality of fan blades. Sonic disk assembly **32** is positioned in front of fan **36** within passageway **18**, i.e., arranged proximate first opening **24**. Preferably, a center point of fan **36** is arranged on first axis AX**1** and a center point of sonic disk assembly **32** is also arranged on first axis AX**1**.

Mounting arm assembly **38** is pivotally and removably connected to body **12** and is arranged to rotate about second axis AX**2**. Preferably, mounting arm **38** extends distally from body **12** and includes mounting device **40** removably connected to its distal end.

In reference to the aforementioned figures and FIG. **3**, passageway **18** includes oppositely arranged openings, opening **24** and opening **26**, where opening **24** is a front opening and opening **26** is a rear opening. Arranged within upper section **20** of body **12** is arcuate internal reservoir **42** (discussed further, infra), which has proximal inlet **44** substantially arrange within mouth **56** that protrudes from a top of upper section **20**. Mouth **56** may include threading **58** thereon allowing cap **70** to be threadably secured to mouth **56**, thereby sealing internal reservoir **42**.

In a preferred embodiment, mounting arm assembly **38** is removably and pivotably connected to body **12** at mounting sections **52** and **54** (both shown in FIG. **4**B), where the mounting sections extend from both upper section **20** and lower section **22** from opposite sides thereof. Preferably, the mounting sections each having an aperture arranged therein where the apertures are centered about second axis AX**2**. In one possible arrangement, mounting arm assembly **38** includes base **158** having first arm **154** and second arm **156** extending therefrom. First arm **154** terminates at end **150** and second arm terminates at end **152**, whereas ends **150** and **152** are arranged distally from base **158**. End **150** includes mounting aperture **162** therein and end **152** includes mount-

ing aperture **164** therein. Mounting apertures **162** and **164** are arranged to align with mounting sections **52** and **54**, where threaded connectors **166** and **168** engage both mounting apertures **162** and **164** and the apertures of the mounting sections to removably and pivotably secure mounting arm assembly to body **12**. It should be noted that any acceptable connector type may be used to removably secure mounting arm assembly **38** to body **12**, so long as alternative connector types allow ends **150** and **152** to rotate about axis AX**2**. Connector **160** is secured to base **158** and extends in an opposite direction of arms **154** and **156**. Connector **160** is arranged to removable engage connector of mounting device **40**, where mounting device **40** is shown having magnet **172** attached and extending from connector **170**. Mounting device **40** is discussed in greater detail in view of FIGS. **7**A and **7**B, infra.

In a preferred embodiment, perforated grate **28**, i.e., a first faceplate, is arranged to removably secure within opening **24** of body **12** and perforated grate **30** is arranged to either removably or fixedly secure (via fasteners) within opening **26** of body **12**. Perforated grate **30** generally houses fan assembly **34** which includes motor **48** and fan **36**. Perforated grate **30** and fan assembly **34** are discussed in greater detail in view of FIGS. **5**A and **5**B, infra.

FIGS. **4**A and **4**B show body **12** in an isolated perspective view and a cross-sectional taken generally along line **4**B-**4**B. As discussed supra, mounting sections **52** and **54** extend from opposite sides of body **12** and substantially arranged between upper section **22** and lower section **24** of body **12**, such that mounting apertures arranged therein are substantially colinear and arranged along axis AX**2**. As shown in FIG. **4**B, upper section **22** includes arcuate internal reservoir **42** therein. Reservoir **42** is in communication with inlet **44**, first distal inlet **62**, second distal inlet **64**, outlets **46**, **48**, and **50**. Reservoir **42** is bounded by reservoir floor **60**, upper surface **61**, slope **66**, and slope **68**. Slopes **66** and **68** extend from upper surface **61**. Distal inlet **62** is arranged proximate lower section **22** and is formed between slope **66** and reservoir floor **60** and distal inlet **64** is arranged proximate lower section **22**, opposite distal inlet **62**, and is formed between slope **68** and reservoir floor **60**. Distal inlets **62** and **64** are in communication with outlets **48** and **50**. The aforementioned arrangement of outlets **46**, **48**, and **50**, being arranged distally in relation to inlet **44**, allow gravity to carry water arranged within outlet to one or more of outlets **46**, **48**, and **50**, such that if body **12** is rotated about axis AX**1** or AX**2** (via the mounting arm assembly), water within reservoir **42** will flow through one or more of outlets **46**, **48**, and **50**. The arrangement of distal inlets **62** and **64** (which are in communication with outlets **48** and **50**) between slopes **66** and **68** and reservoir floor **60** ensure that once a water level within reservoir **42** is lower than outlet **46**, the water will still be able to flow, via gravity, into outlets **48** and **50**. Thus, the curvature or arcuate configuration of reservoir floor **60**, upper surface **61**, and slopes **66** and **68** substantially creates a pair of funnels for water flowing through distal inlets **62** and **64** into outlets **48** and **50**.

FIGS. **5**A and **5**B show exploded perspective views of fan assembly **34** and perforated grate **30**. In a preferred embodiment, perforated grate (or backplate) **30** includes aperture **76** therein. Aperture **76** is arranged to accept motor assembly **78** of fan assembly **34** therein, preferably via a plurality of apertures, thusly allowing fan assembly **34** to be removed from grate **30**. In one possible embodiment, motor assembly **78** comprises a brushless DC motor which is arranged within at least a water resistant and/or waterproof housing/shroud and having drive shaft **82** extending from an opposite end of cavity **80**. Drive shaft **82** is arranged to accept fan **36** thereon. Cavity **80**, or component housing, is arranged to accept control board **82** therein, which may be secured therein via fasteners or the like. Control board **82** generally includes plurality of inputs **84**, e.g., on/off fan power toggles and/or continuous/intermittent/none misting toggles, battery **86**, battery connector **88**, at least one printed circuit board (PCB) **92**, which may be two PCBs comprising a battery PCB and a motor control and mister control PCB, battery level indicators **90**, and power/misting setting indicators **94**.

Battery **86** may be two 3.7v 5000 mah batteries wired in parallel for a total capacity of approximately 10,000 Mah or may be an alternative battery configuration so long the selected battery is rechargeable and can efficiently power motor assembly **78** for an extended duration in arid and/or humid environments. Battery **86** is in communication with PCB **92**, or multiple PCBs in alternative configurations, battery connector **88**, and motor assembly **78**. Battery connector **88** is a charger input and may be configured as a plurality of connectors, such as, but not limited to, USB 2.0, USB 3.0, Micro USB, Thunderbolt®, or like alternatives, such that connector **88** may be used to connect battery **86** to a power source to charge battery **86**, and/or power motor assembly **78** if battery **86** has no charge.

Plurality of inputs **84** are in communication with at least one PCB **92** such that PCB **92** is in communication with motor assembly **78** and battery **86**, whereas plurality of inputs **84** control motor assembly **78** and thus the speed of fan **36**. In a preferred embodiment, PCB **92** is also in communication with sonic disk assembly **32** (see FIGS. **6**A through **6**C, infra) and controls atomization (misting) of water from the sonic disk assembly by selectably, via plurality of inputs **84**, communicating an electrical current to the sonic disk assembly. In some embodiments, PCB **92** may also include a buzzer or alarm thereon, which may be configured to make a noise when plurality of inputs **84** are actuated and/or when connector **88** is in communication with a power source.

As such, one having ordinary skill in the art will appreciate that control board **82** will have a microcontroller being able to control communications from plurality of inputs **84** to the various aforementioned components, turn of the sonic disk assembly in response to a communication received therefrom, toggle indicator lights in response to power on/off, fan speed settings, misting control settings of the sonic disk assembly, control a buzzer, etc. As such, any capable microcontroller now known, or hereinafter developed, is intended within the scope of the appending claims to provide the functionality of the present invention.

FIGS. **6**A through **6**C illustrate sonic disk assembly **32** isolated from the body, specifically a perspective view and a pair of cross-sectionals taken generally along lines **6**B-**6**B and **6**C-**6**C, respectively. In one possible embodiment, sonic disk assembly **32** includes body **94**, cover **96**, gasket **98** having sonic disk **110** therein, internal cavity **106** having first inlet **100**, second inlet **102**, and third inlet **104** in communication with internal cavity **106**. Internal cavity **106** has opening **108** which cover **96**, and gasket **98** within cover **96**, seal. Conduits **112**, **122**, and **132** are arranged to engage inlets **100**, **102**, and **104**, respectively. Conduit **112** includes ends **114** and **116** having connectors **118** and **120** thereon, respectively, where connector **118** removably engages inlet **100**, via threading or other removable securement means that maintain a water-tight connection. Conduit **122** includes ends **124** and **126** having connectors **128** and **130** thereon, respectively, where connector **128** removably engages inlet **102**, via threading or other removable securement means

that maintain a water-tight connection. Conduit **132** includes ends **134** and **136** having connectors **138** and **140** thereon, respectively, where connector **134** removably engages inlet **104**, via threading or other removable securement means that maintain a water-tight connection. Connectors **120**, **130**, and **140** are arranged to engage the outlets of the body (see FIG. **4**B, outlets **46**, **48**, and **50** of upper section **20** of body **12** thereby fluidly connecting reservoir **42** and internal cavity **106**) thereby allowing water to flow from within the reservoir of the body into internal cavity **106** of sonic disk assembly **32**. Since body **94** and internal cavity **106** is generally arranged distally in relation to the outlets of the body, i.e., has a floor lower than the outlets, gravity and the weight of the water will continuously feed water into internal cavity **106** until the reservoir of the body is empty.

Sonic disk **110**, which may be a piezoelectric atomizer, is arranged within gasket **98** such that a surface thereof is facing outwardly from opening **108** and a respective opposite surface is facing into internal cavity **106**. Sonic disk **110**, as discussed above, is in communication with control board **82** (see FIGS. **5**A and **5**B) such that when the respective input is actuated on control board **82**, an electrical current is sent to sonic disk **110**, thereby activating it. When sonic disk **110** is activated, water within internal cavity **106** that is in contact with disk **110** is atomized and the atomized water is then expelled through pores arranged substantially within the center of disk **110**, which pores are of such a size that, when water is not atomized, it cannot pass through disk **110**, i.e., when disk **110** is not activated, water will not pass therethrough. In a non-limiting example, disk **110** may be a piezoelectric atomizer and may receive 113 kHz current from the control board upon actuation of an input, discussed supra. Additionally, disk **110** may receive pulses, or intermittent electrical current, thereby atomizing water in intervals, thus preserving the water level within the reservoir of the body.

In some embodiments, internal cavity **106** of sonic disk assembly **32** may have a water sensor in communication with the control board, which sensor will automatically halt electric current being sent to disk **110** when water is no longer detected within internal cavity **106**.

FIGS. **7**A and **7**B illustrate exploded views of mounting device **40**. Generally, mounting device **40** comprises connectors **160** and **170**. Connector **160** is generally a base connector which is arranged to be secured to the mounting arm assembly (see FIGS. **1**B, **2**B, and **3**) and may comprise mounting body **174**, extension **176**, tabs **178** and **180**, and mounting aperture **182**. Extension **176** protrudes from body **174** and has tabs **178** and **180** extending therefrom. Tabs **178** and **180** are springingly connected to extension **176**, such that if force is applied to respective outer surfaces of the tabs in a radially inward direction towards mounting aperture **182**, the configuration biases tabs **178** and **180** to apply an opposite force in the radial outward direction, in other words, tabs **178** and **180** are biased in the configuration shown and return to that position absent the aforementioned forces. Mounting aperture **182** may be used to accept a fastener therein allowing the mounting body to be connected to the mounting arm assembly. Connector **170** is generally an accessory connector, e.g., has magnet **172** attached thereto or has a clamp-like device attached thereto. Connector **170** may comprise mounting body **184**, which may be an annular-like protrusion, hexagonal, etc., forming a wall surrounding mounting aperture **190** to create space **192** therein, tab apertures **186** and **188** disposed within the wall formed by body **184**, and magnet **172**—or an alternative mounting apparatus such as a clamp-like device.

Connector **160** is arranged to be removably engaged within connector **170**. Specifically, when tabs **178** and **180** are depressed radially inward, body **174** can be inserted, at least partially, within space **192** of mounting body **184**, where tabs **178** and **180** will release in a radially outward direction and be seated at least partially within tab apertures **186** and **188** once mounting body **174** is at least partially within space **192**, thereby connecting connector **160** to connector **170**. Similarly, if tabs **178** and **180** are depressed radially inward when resting at least partially within tab apertures **186** and **188**, body **174** may be removed from space **192** of mounting body **184**. In other words, the aforementioned configuration of the mounting device is a quick-release type connection.

In some arrangements, connector **170** may be fixedly secured to a plurality of different mounting elements, such as cup-holder body **210**, as shown in FIG. **7**C, or a body having a suction cup, or suction-cup like attachment apparatus, either directly, or in a movably-arranged manner, e.g., a ball-joint, pivotably, rotatably, etc. Cup-holder body **210** is arranged to be seated, at least partially, within a typical cup-holder that may be found in vehicles, such as golf-carts. Cup-holder body **210** may include weights and/or be weighted to prevent the body of the misting fan and mounting arm assembly from tipping and/or removing cup-holder body **210** from a respective cup holder when the portable misting fan is attached, via the mounting arm assembly, thereto.

A representative suction cup mounting that may accommodate connector **170** thereon, with or without a movable arm, is shown and described in U.S. Design Patent No. D688,726, issued Aug. 27, 2013, which design patent is incorporated by reference herein in its entirety.

Another possible representative cup-holder mount that may accommodate connector **170**, with or without a pivotable mechanism extending therefrom, is shown and described in U.S. Pat. No. 10,576,905, issued Mar. 3, 2020, which patent is incorporated by reference herein in its entirety.

A possible representative clamp, or spring clamp mount, that may accommodate connector **170**, is shown and described in U.S. Pat. No. 11,953,256, issued Apr. 9, 2024, which patent is incorporate by reference herein in its entirety.

FIG. **8** illustrates a cross-sectional view of portable misting fan **10** taken generally along line **8**-**8** in FIG. **1**A. In some embodiments, faceplate or grate **28** is removably attached to both upper section **20** and lower section **22** of body **12** and has protrusion **194** extending therefrom proximate reservoir **42** and has protrusion **196** arranged opposite protrusion **194** extending in direction towards backplate or grate **30**. Protrusion **194** resembles a tab or thin body which is arranged to be seated within slot **198** of upper section **20**, which slot is closed but extends into reservoir floor **60**. Protrusion **196** may be configured as a leaf spring with a hook-like end, thus protrusion **196** may move when pressure is applied on its terminal end. Protrusion **196** is arranged to be at least partially seated within release aperture **204** and abut retention tab **202** of release button **200**, thereby frictionally securing protrusion **196** therein, i.e., frictionally securing protrusion **196** to lower section **22**, such that the hook-like end of protrusion **196** also contacts an inner edge of release aperture **204** preventing protrusion **196** from being pulled out of release aperture **204** in a direction towards opening **24**. Release button **200** is arranged to translate within release aperture **204** when force is applied thereon. When force is applied in a direction towards upper section **20** on release

button **200**, retention tab **202** pushes the hook-like end of protrusion **196** in a direction towards upper section **20** and out of release aperture **204**, thereby allowing grate **28** to be pulling out of opening **24** and also allowing protrusion **194** to be removed from slot **198**. This configuration allows grate **28** to be quickly removed from opening **24**, allowing access to the components arranged within passageway **18**, e.g., sonic disk assembly **32**, fan **36**, fan assembly **34**, motor assembly **78**, etc.

In other configurations, grate **28** may include dispensing aperture **206** arranged in a substantial center thereof. One or more of cover **96** or body **94** of sonic disk assembly **32** may be at least partially seated within dispensing aperture **206**, thereby maintaining disk **110** in a substantially central location within dispensing aperture **206** to allow atomized water AW to be expelled therefrom and through dispensing aperture **206**. When fan assembly **34** is activated, fan **36** produces air flow in air flow direction AFD which will disperse atomized water AW from disk **110**—producing a water misting effect.

In some embodiments, cap **70** may include retainer clip **208** extending distally therefrom. Retainer clip **208** may be configured with a plurality of arms which extend past an internal diameter of proximal inlet **44** to keep cap **70** from being accidentally removed. The arms of retainer clip **208** may be semi-flexible, such that when cap **70** is pulled with force and in a direction away from proximal inlet **44**, the arms will collapse in a radially inward direction, thereby allowing cap **70** to be removed.

The following description should be taken in view of the aforementioned figures and FIG. **9**. FIG. **9** high-level schematic of a representative control board and components of portable misting fan **10** that generally shows representative electrical communications, including electrical current (e.g., power) from control board **82** between the components of portable misting fan **10**, e.g., motor assembly **78**, sonic disk assembly **32**, battery **86**, battery connector **88**, PCBs **92**, indicators **90**, etc. It should be appreciated that FIG. **9** is merely representative and one having ordinary skill in the art will appreciate that various combinations, alternatives, etc. may be possible to power and control the present invention, as such, FIG. **9** should not be considered restrictive on the scope of the appending claims.

Thusly, the embodiments shown and described are merely exemplary and various alternatives, combinations, omissions, of specific components, or foreseeable alternative components, understood by one having ordinary skill in the art, described in the present disclosure or within the field of the present disclosure, are intended to fall within the scope of the appending claims.

It will be appreciated that various aspects of the invention and other features and functions, or alternatives thereof, may be desirably combined into many other different systems or applications. Various presently unforeseen or unanticipated alternatives, modifications, variations, or improvements therein may be subsequently made by those skilled in the art which are also intended to be encompassed by the claims.

REFERENCE NUMERALS

10 Portable misting fan
12 Body
14 Front end
16 Back end
18 Passageway
20 Upper section
22 Lower section
24 First opening
26 Second opening
28 First grate
30 Second grate
32 Sonic disk assembly
34 Fan assembly
36 Fan
38 Mounting arm assembly
40 Mounting device
42 Arcuate internal reservoir
44 Proximal inlet
46 First outlet
48 Second outlet
50 Third outlet
52 First mounting section
54 Second mounting section
56 Mouth
58 Threading
60 Reservoir floor
61 Upper surface
62 First distal inlet
64 Second distal inlet
66 First reservoir wall slope
68 Second reservoir wall slope
70 Cap
72 Internal end
74 External end
76 Aperture
78 Motor assembly
80 Cavity
82 Control board
84 Plurality of inputs
86 Battery
88 Battery connector
90 Plurality of indicators
92 PCBs
94 Body
96 Cover
98 Gasket
100 First inlet
102 Second inlet
104 Third inlet
106 Internal cavity
108 Opening
110 Disk
112 First conduit
114 End
116 End
118 Connector
120 Connector
122 Second conduit
124 End
126 End
128 Connector
130 Connector
132 Second conduit
134 End
136 End
138 Connector
140 Connector
150 First end
152 Second end
154 First arm
156 Second arm
158 Base
160 Connector
162 Mounting aperture

164 Mounting aperture
166 First threaded connector
168 Second threaded connector
170 Connector
172 Magnet
174 Mounting body
176 Extension
178 Tab
180 Tab
182 Mounting aperture
184 Mounting body
186 Tab aperture
188 Tab aperture
190 Attachment aperture
192 Space
194 Protrusion
196 Protrusion
198 Slot
200 Release button
202 Retention tab
204 Release aperture
206 Dispensing aperture
208 Retainer clip
210 Cup-holder body
AFD Air flow direction
AW Atomized water
AX1 First axis
AX2 Second axis

What is claimed is:

1. A portable misting fan, comprising:

a body having interconnected upper and lower sections thereby circumferentially defining a passageway with respective open ends therebetween, said upper section comprising an arcuate internal reservoir therein, said internal reservoir having an inlet and at least one outlet;

a fan assembly arranged at least partially within said passageway;

a sonic disk assembly in communication with said at least one outlet and positioned in front of said fan assembly;

a mounting arm pivotably connected to said body about an axis perpendicularly arranged with respect to said open ends of said passageway, wherein said sonic disk assembly is adapted to selectably atomize and disperse water, communicated from said internal reservoir, therefrom in one or more of a continuous or intermittent manner;

a controller in communication with said fan assembly and said sonic disk assembly, said controller adapted to toggle power to said fan assembly and to toggle activation of said sonic disk assembly; and,

a perforated grate attached to one of said open ends of said passageway distally arranged relative to said sonic disk assembly, said perforated grate having said fan assembly and said controller arranged therein.

2. The portable misting fan recited in claim 1 further comprising a battery in communication with said fan assembly.

3. The portable misting fan recited in claim 1 further comprising mounting means removably connected to a distal end of said mounting arm.

4. The portable misting fan recited in claim 3, wherein said mounting means comprises one or more of a movably connected clamp, a movable connected suction cup, a magnet, or a movably connected cup-holder mount.

5. The portable misting fan recited in claim 1 further comprising a first, second, and third outlet, which aforementioned outlets are in communication with said sonic disk assembly.

6. The portable misting fan recited in claim 1 further comprising at least one perforated grate removably attached to one or more of each of said open ends of said passageway.

7. The portable misting fan recited in claim 1 further comprising a battery in communication with said controller, said fan assembly, and said sonic disk assembly.

8. The portable misting recited in claim 3, wherein said mounting means comprises:

a first connector secured to said distal end of said mounting arm, said first connector comprising a mounting body having one or more spring-biased tabs extending therefrom; and,

a second connector comprising a wall defining a space and having one or more tab apertures,

wherein said first connector is arranged to be removably engaged within said space of said second connector such that said one or more spring-biased tabs engage said one or more tab apertures, thereby forming a quick-release connection.

9. The portable misting fan recited in claim 8, wherein said second connector is attached to one or more of a clamp, a suction cup, a magnet, or a cup-holder mount.

10. The portable misting fan recited in claim 1, wherein said arcuate internal reservoir comprises:

a reservoir floor;

an upper surface; and,

a first reservoir wall slope and a second reservoir wall slope extending from said upper surface, wherein said reservoir floor and said first and second reservoir wall slopes define at least one funnel configured to direct water towards said at least one outlet.

11. The portable misting fan recited in claim 1, further comprising a water sensor in communication with said controller, wherein said water sensor is arranged to detect the presence of water for said sonic disk assembly, and wherein said controller is further adapted to halt activation of said sonic disk assembly when said water sensor no longer detects the presence of water.

12. The portable misting fan recited in claim 1, further comprising a buzzer in communication with said controller, wherein said controller is further adapted to cause said buzzer to provide an audible feedback in response to an actuation of one or more user inputs.

13. The portable misting fan recited in claim 1, wherein said controller is in communication with a power management system, said power management system being configured to manage power from a battery and an external power source.

14. The portable misting fan recited in claim 13, further comprising a battery capacity indicator in communication with said power management system, wherein said power management system is configured to cause said battery capacity indicator to display a status of said battery.

* * * * *